LA NORDICA®

Riscalda la vita.

UK

MADE IN ITALY
design & production

WOOD PRODUCTS USER MANUAL

DANTE.16

DANTE.16 CON PORTALEGNA

004300005 - Rev.000

ATTENTION

SURFACES CAN BECOME VERY HOT!
ALWAYS USE PROTECTIVE GLOVES!

During combustion, thermal energy is released that significantly increases the heat of surfaces, doors, handles, controls, glass, exhaust pipes, and even the front of the appliance. Avoid contact with those elements if not wearing protective clothing (protective gloves included). Make sure children are aware of the danger and keep them away from the stove during operation.

ENGLISH **14**

MANUFACTURER'S DECLARATION OF CONFORMITY **14**
GENERAL NOTICES **14**
SAFETY **14**
FIRE SAFETY 16
MINIMUM CLEARANCES 16
IN CASE OF FAULTS **16**
FIRST-AID MEASURES 17
INSTALLATION REGULATIONS **18**
MAINTENANCE PROVISIONS 18
VENTILATION AND AERATION OF THE INSTALLATION AREA **18**
PERMITTED/NOT PERMITTED FUELS **20**
CALCULATION OF THE HEAT OUTPUT **20**
FLUE EXHAUST **21**
FLUE PIPE 21
FLUE 21
SHARED CHIMNEY FLUE 22
CHIMNEY POT 23
DETAILS DANTE.16 ..... **25**
DETAILS DANTE.16 CON PORTALEGNA **26**
TECHNICAL DESCRIPTION **27**
IGNITION **29**
PREPARING FOR IGNITION 29
NORMAL OPERATION **31**
LOADING INSTRUCTIONS 31
USING THE FOOD WARMER (WHERE PRESENT) 32
OPERATION AT HIGH OUTSIDE TEMPERATURES 32
MAINTENANCE AND CARE **33**
REGULAR CLEANING UNDER THE USER'S RESPONSIBILITY 33
CLEANING THE GLASS 33
CLEANING THE ASH DRAWER 33
CLEANING THE FLUE 34
MAJOLICA (IF PRESENT) 34
NATURAL STONE PRODUCTS (IF PRESENT) 35
PAINTED PRODUCTS (IF PRESENT) 35
ENAMELLED PRODUCTS (IF PRESENT) 35
CHROME-PLATED COMPONENTS (IF PRESENT) 35
CAST IRON RINGS (IF PRESENT) 35
CLEANING THE FIREBOX GRATE 35
FOOD WARMER MAINTENANCE (WHERE PRESENT) 35
SUMMER SHUTDOWN 36
ROUTINE MAINTENANCE PERFORMED BY QUALIFIED TECHNICIANS **36**
GASKETS 36
CONNECTION TO THE CHIMNEY 36
SYMBOL EN 16510-1 ..... **37**

INSTALLAZIONE. INSTALLATION. INSTALLATION. L'INSTALLATION. LA INSTALACIÓN.

PRIMA DELL'INSTALLAZIONE ESEGUIRE LE SEGUENTI VERIFICHE.

BEFORE THE INSTALLATION PERFORM THE FOLLOWING CHECKS.

VOR DER AUFSTELLUNG FOLGENDE PRÜFUNGEN AUSFÜHREN.

AVANT L'INSTALLATION IL FAUT RÉALISER LES SUIVANTES VÉRIFICATIONS.

ANTES DE LA INSTALACIÓN, REALIZAR LOS CONTROLES SIGUIENTES

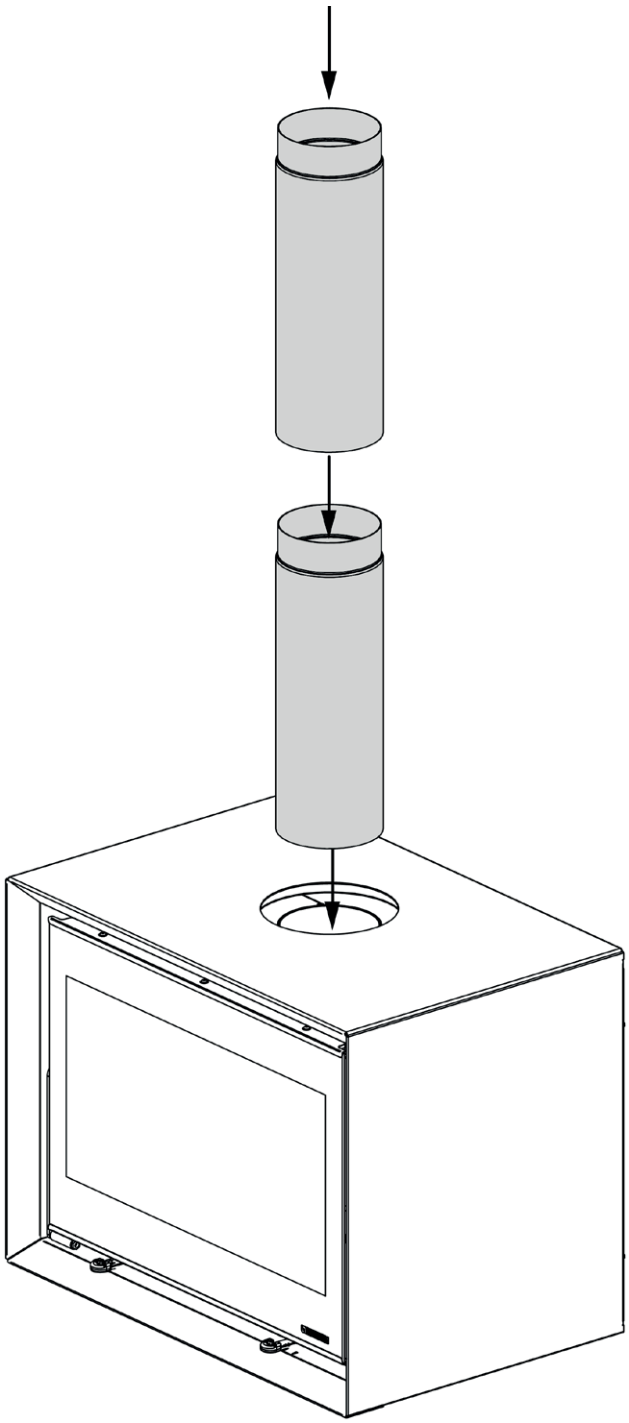

INSTALLAZIONE DANTE.16 - INSTALLAZIONE DANTE.16
INSTALLAZIONE DANTE.16 - INSTALLAZIONE DANTE.16
INSTALLAZIONE DANTE.16

1

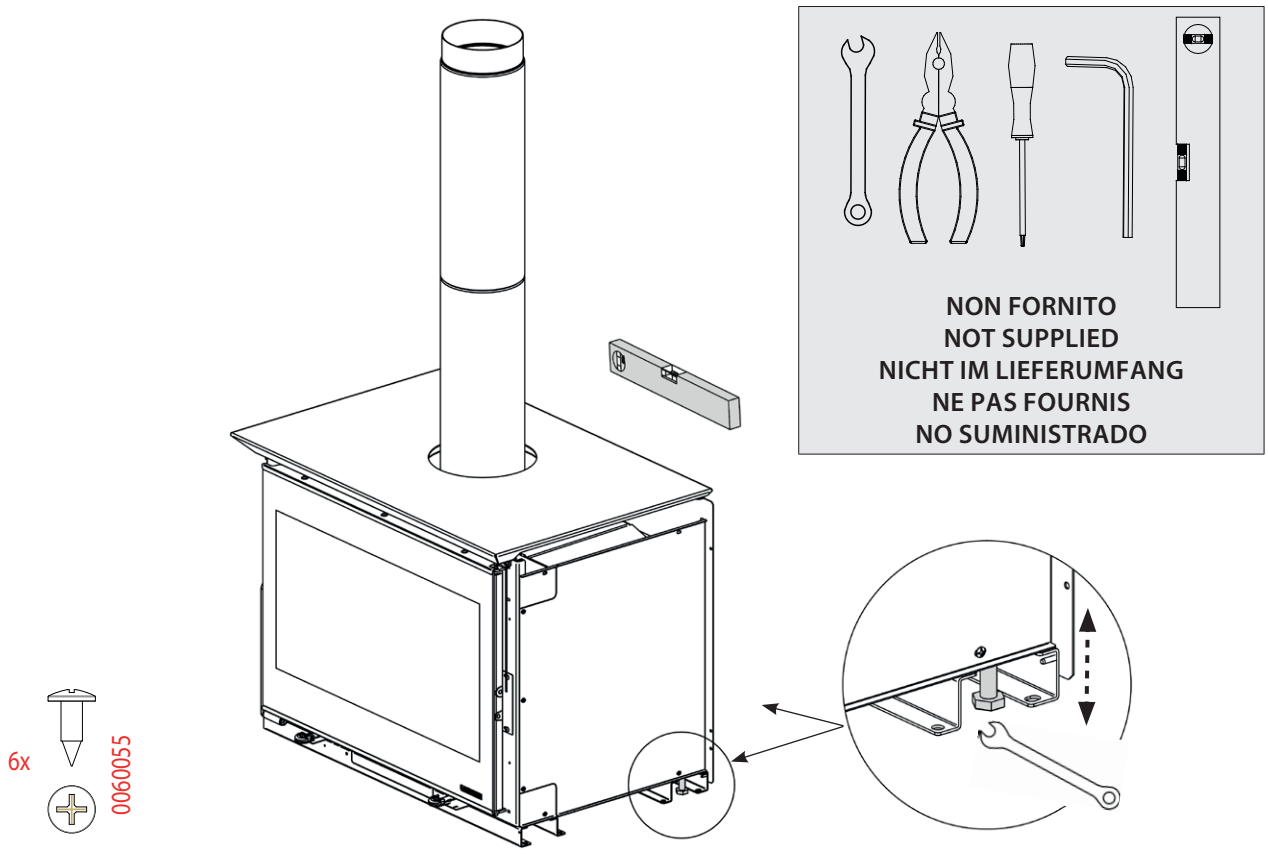

2

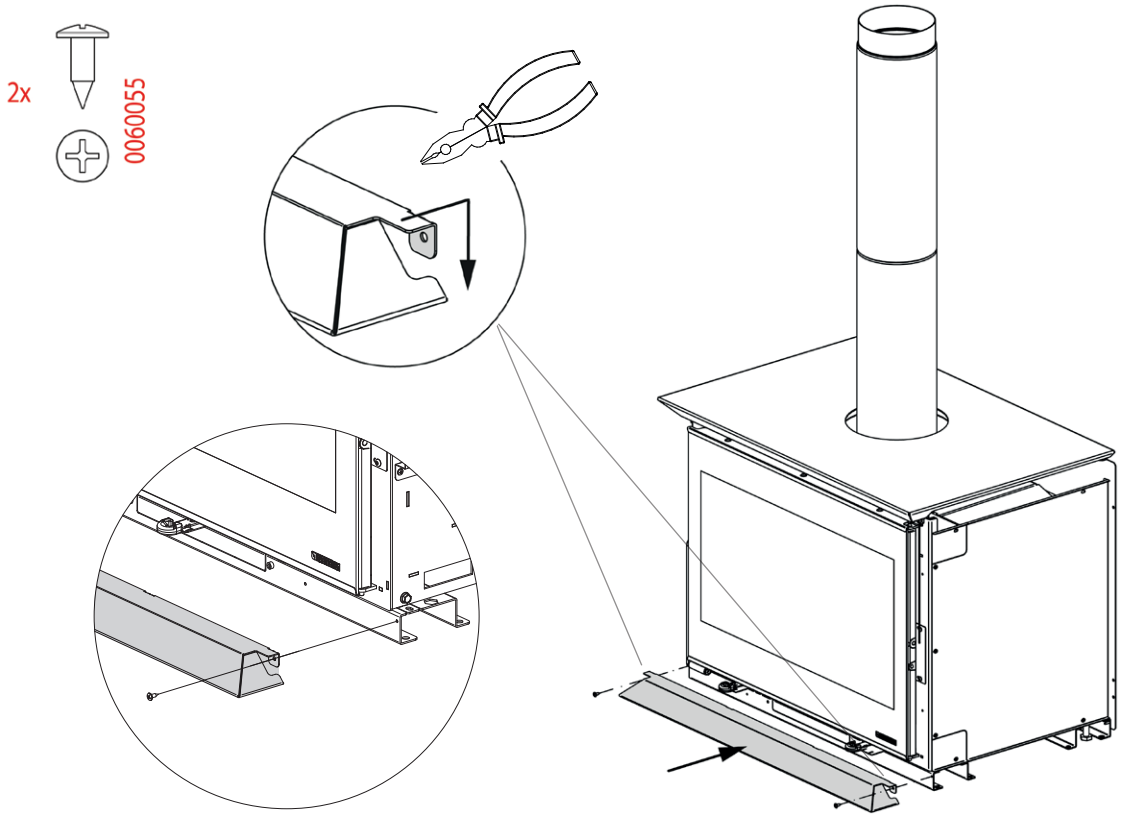

3

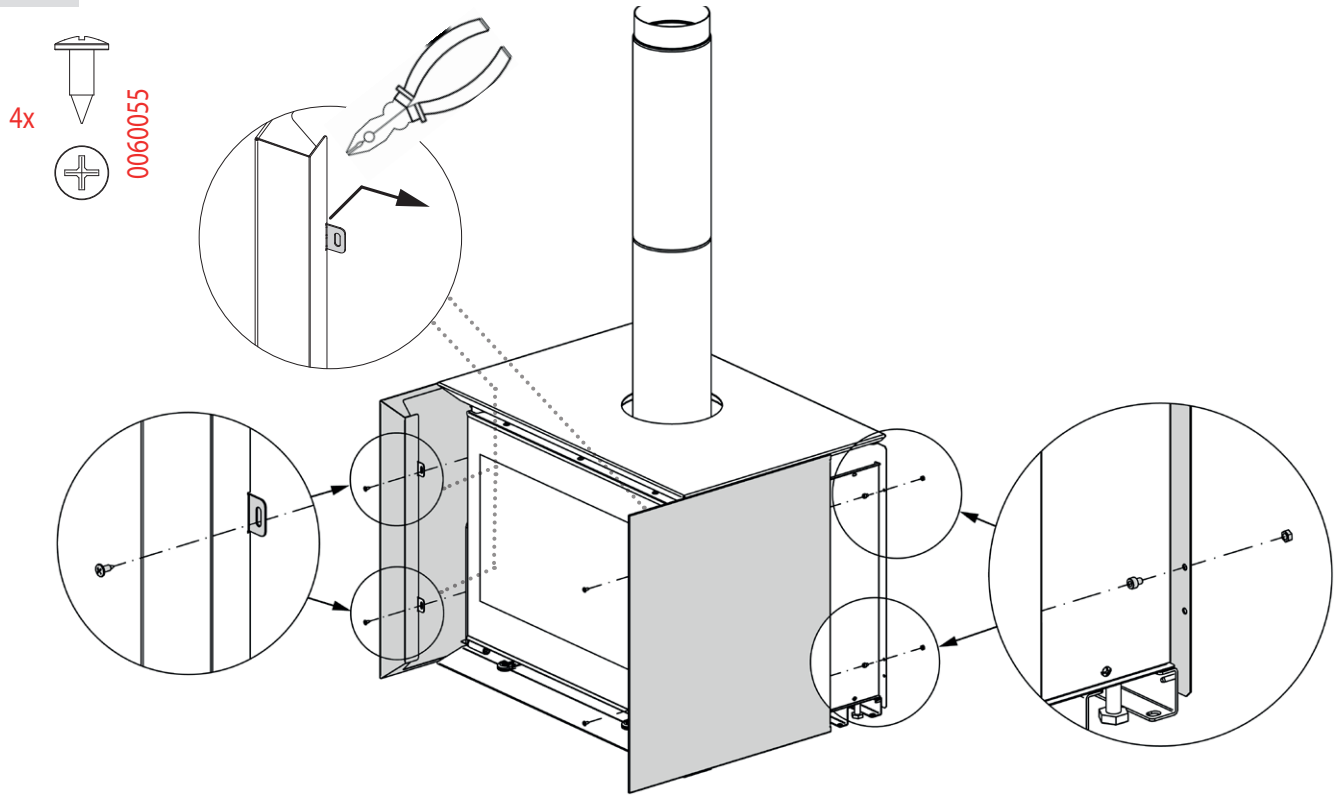

4

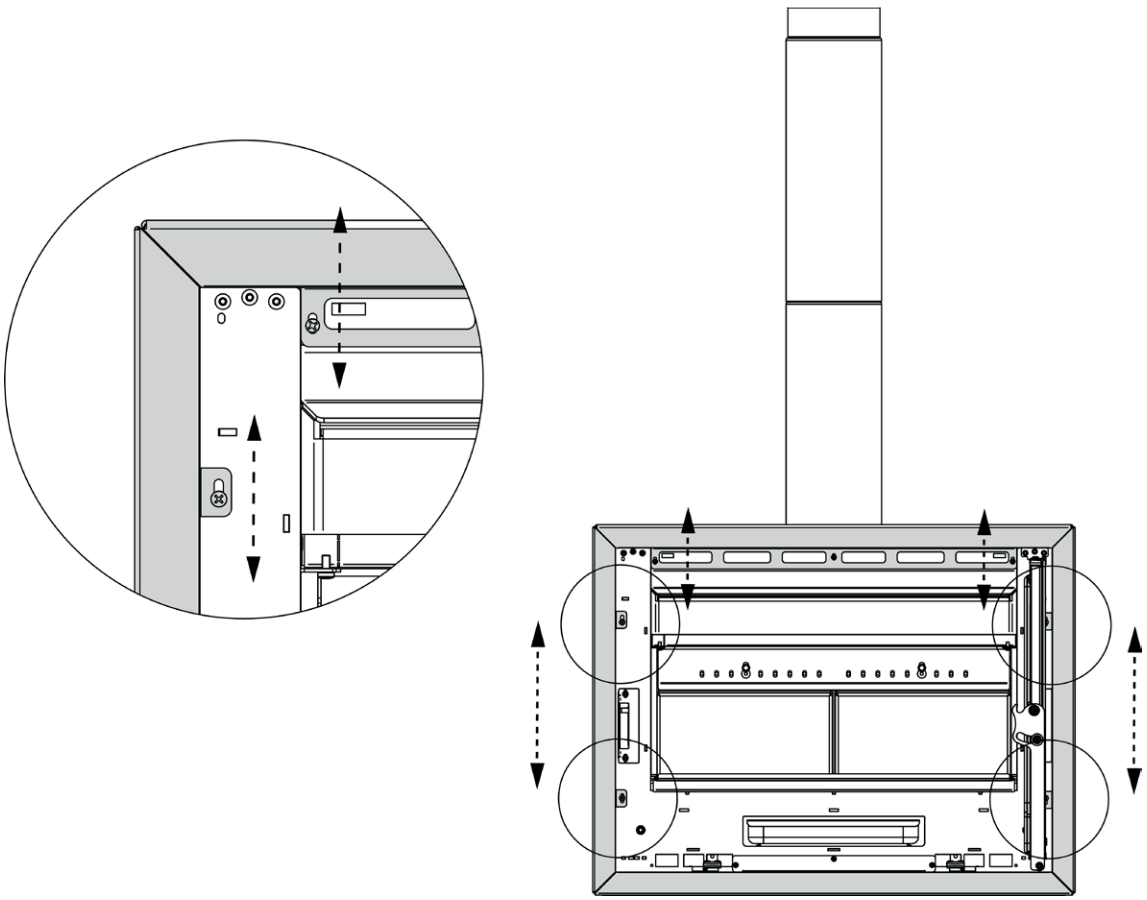

INSTALLAZIONE DANTE.16 CON PORTALEGNA - INSTALLAZIONE DANTE.16 CON PORTALEGNA
INSTALLAZIONE DANTE.16 CON PORTALEGNA - INSTALLAZIONE DANTE.16 CON PORTALEGNA
INSTALLAZIONE DANTE.16 CON PORTALEGNA

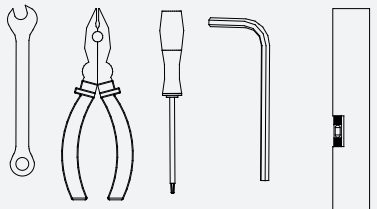

NON FORNITO
NOT SUPPLIED
NICHT IM LIEFERUMFANG
NE PAS FOURNIS
NO SUMINISTRADO

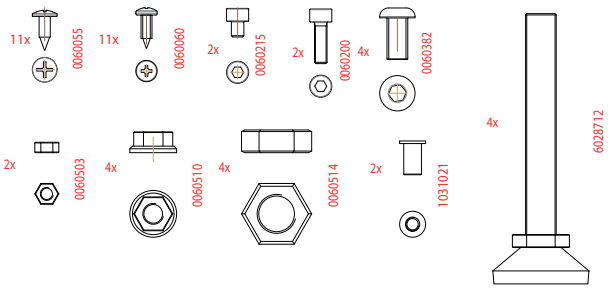

1

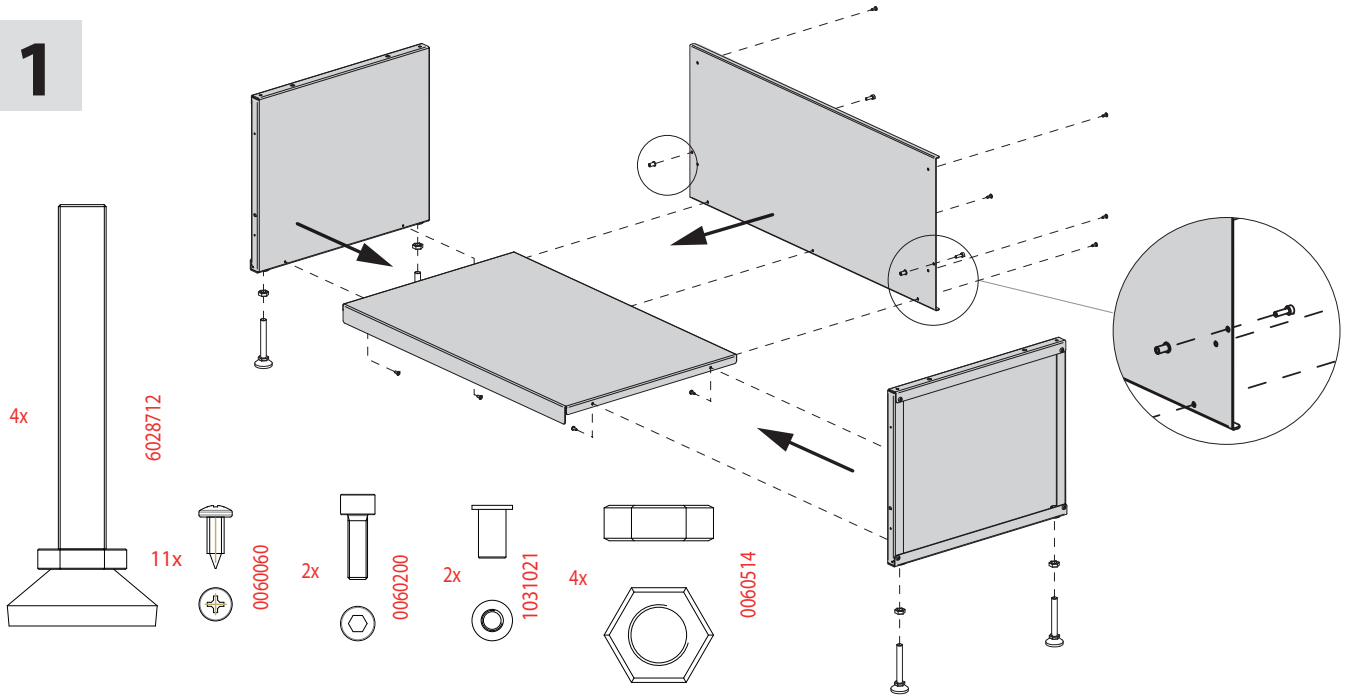

2

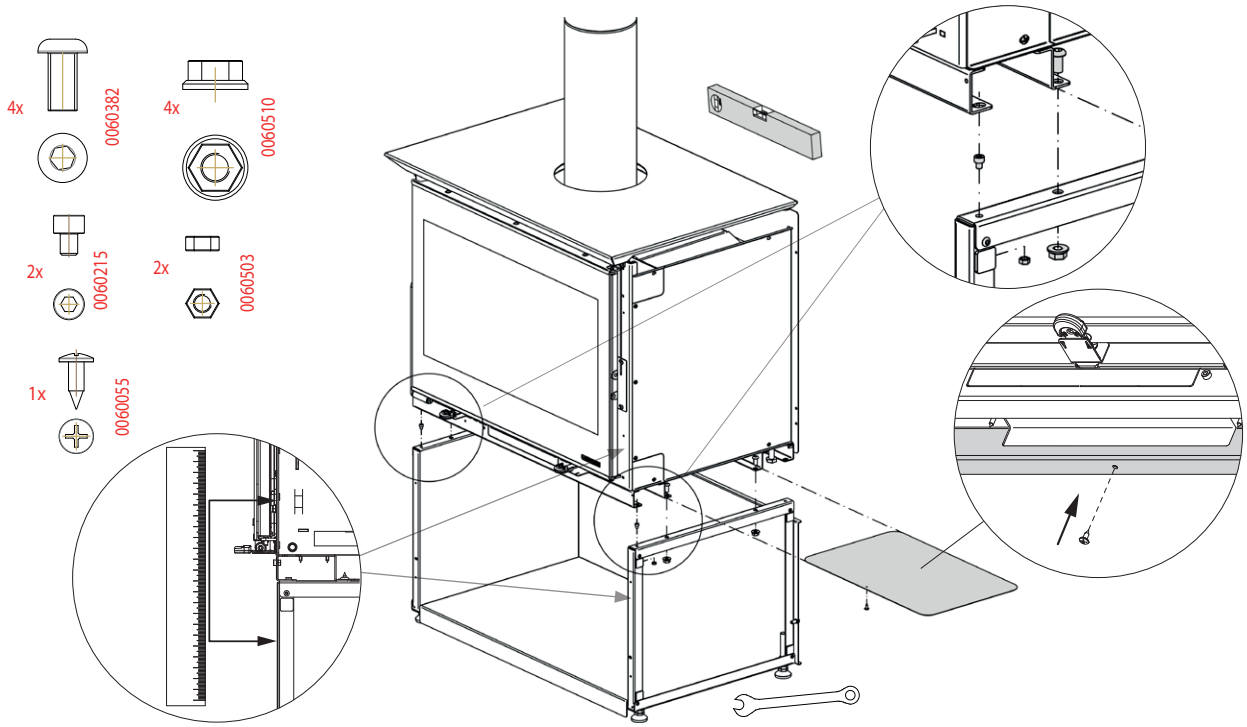

3

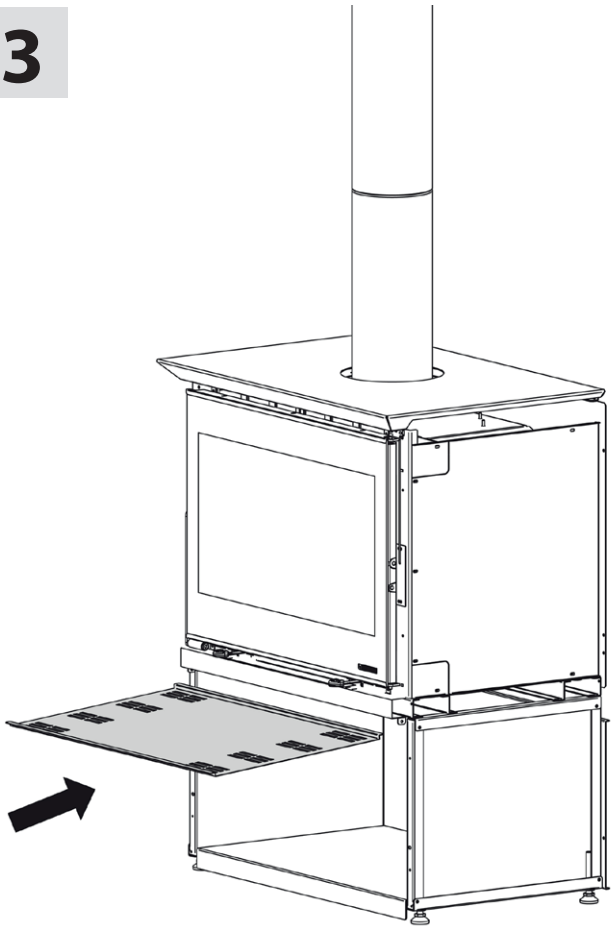

4

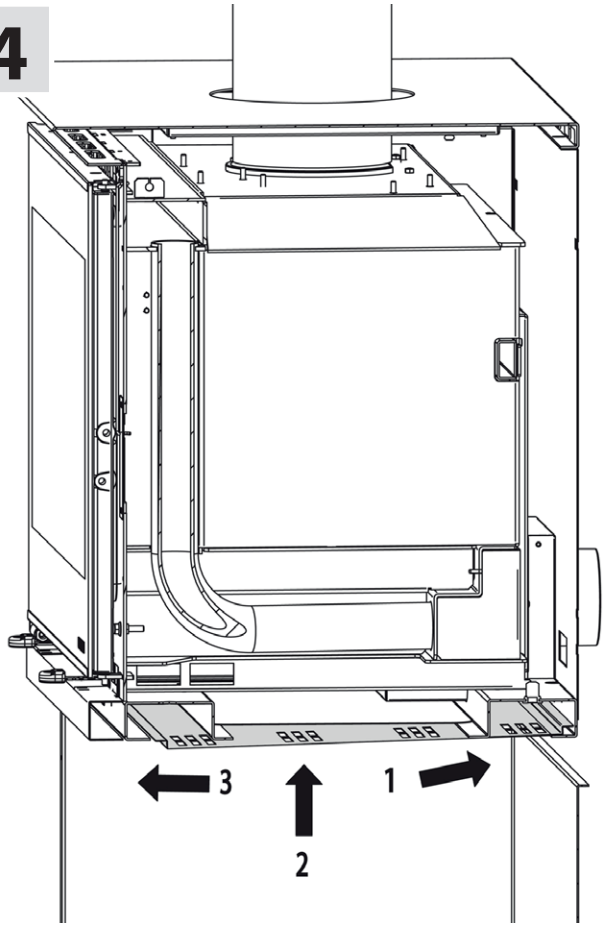

5

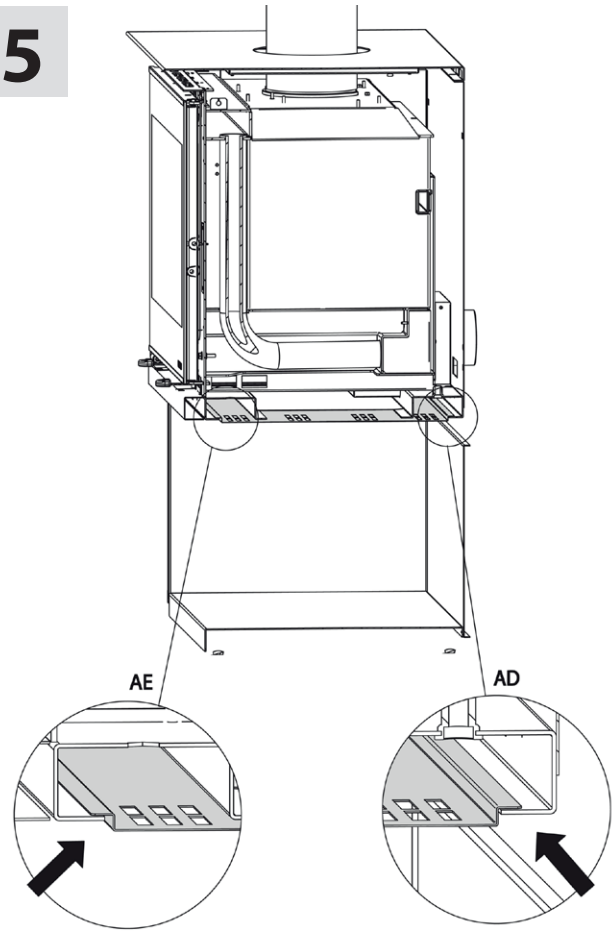

6

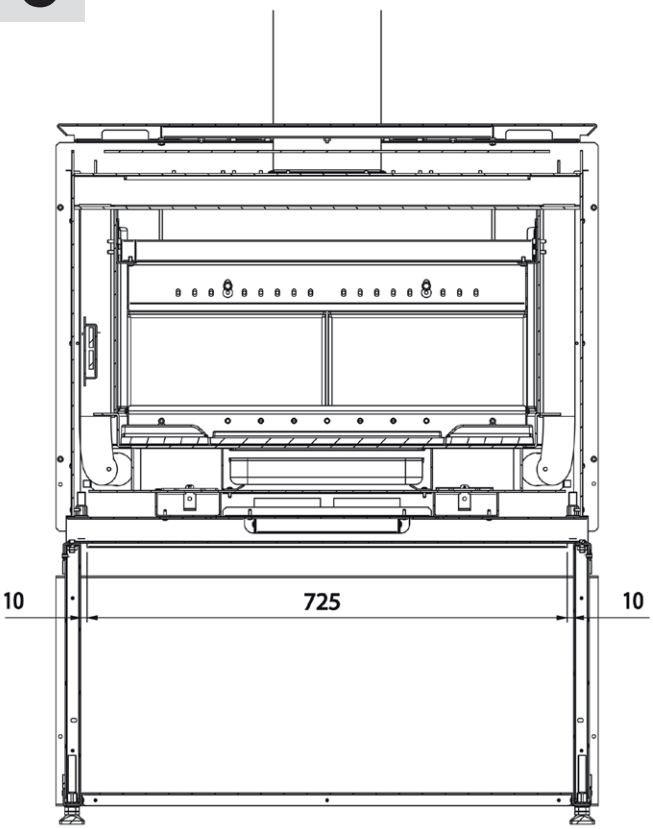

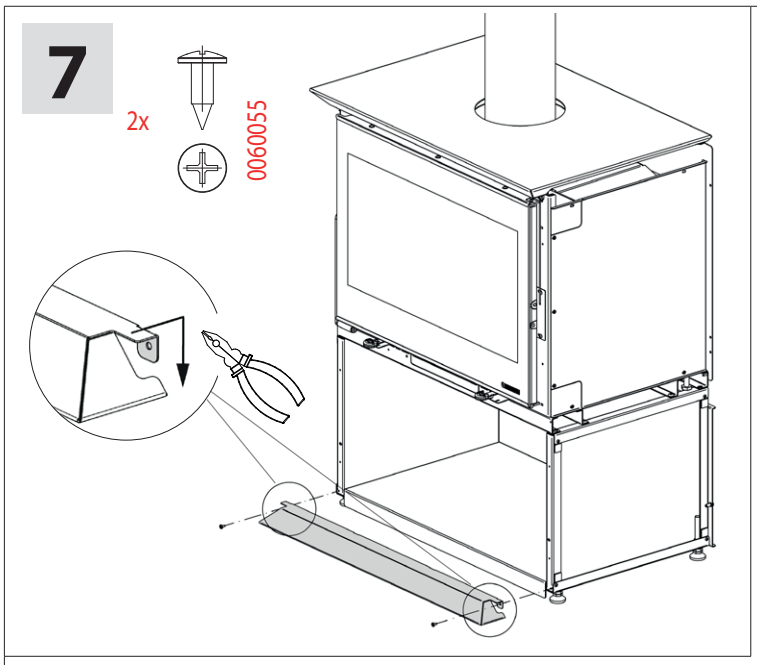
7
2x
0060055

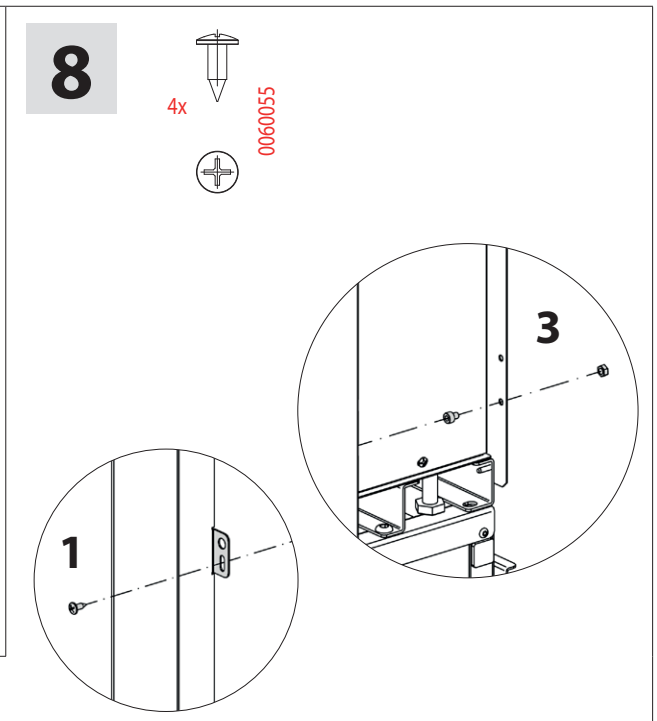
8
4x
0060055
3
1

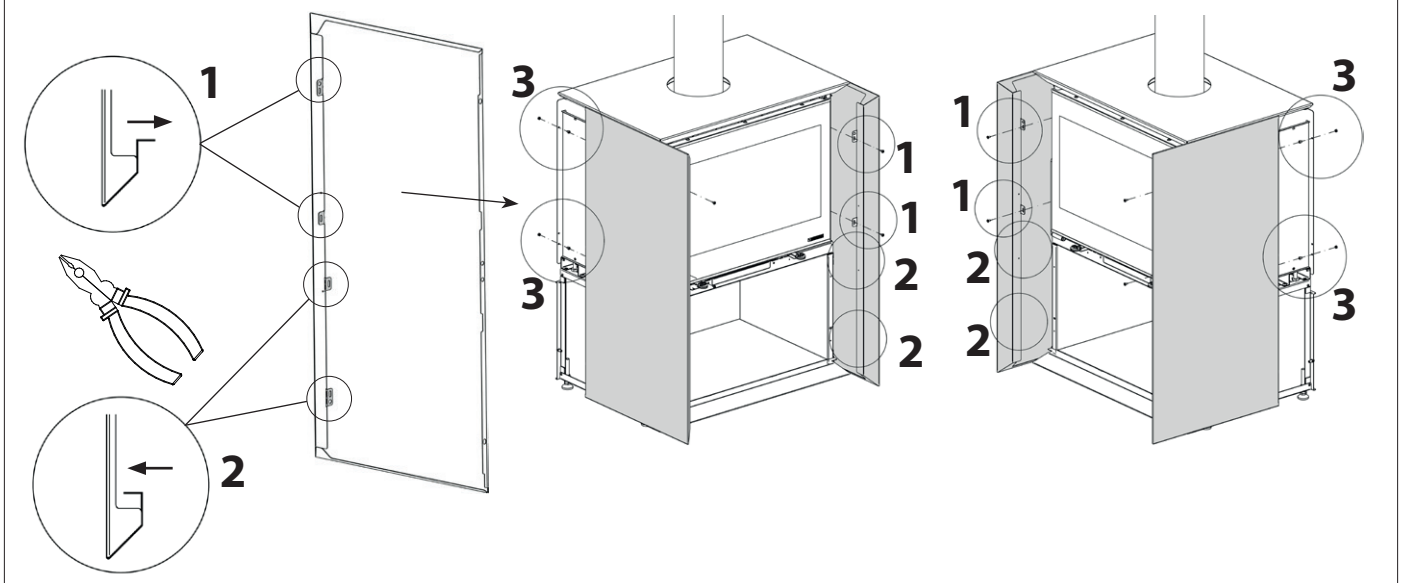
1
2
3
1
1
2
2
3
1
1
2
2
3
3

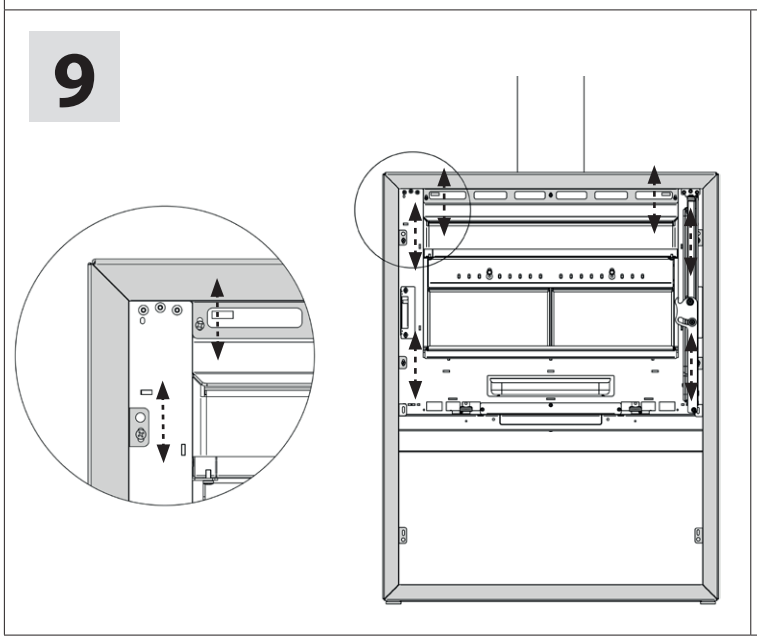
9

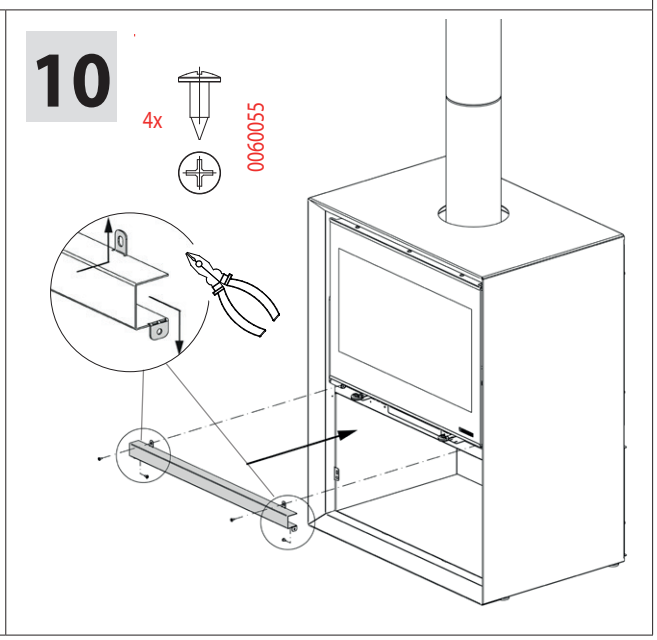
10
4x
0060055

INSTALLAZIONE DANTE.16 CON PANCA - INSTALLAZIONE DANTE.16 CON PANCA
INSTALLAZIONE DANTE.16 CON PANCA - INSTALLAZIONE DANTE.16 CON PANCA
INSTALLAZIONE DANTE.16 CON PANCA

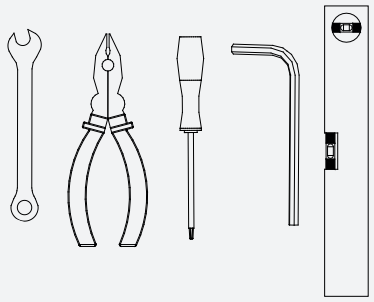

NON FORNITO
NOT SUPPLIED
NICHT IM LIEFERUMFANG
NE PAS FOURNIS
NO SUMINISTRADO

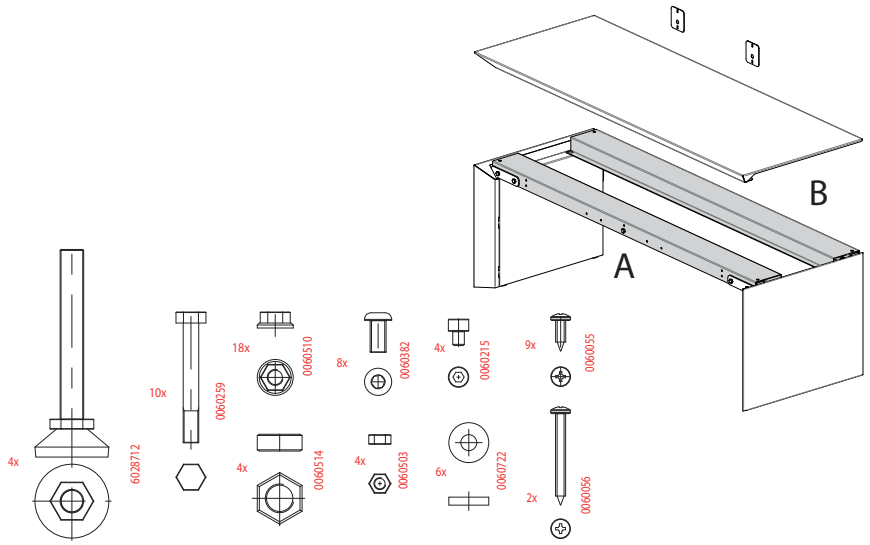

1

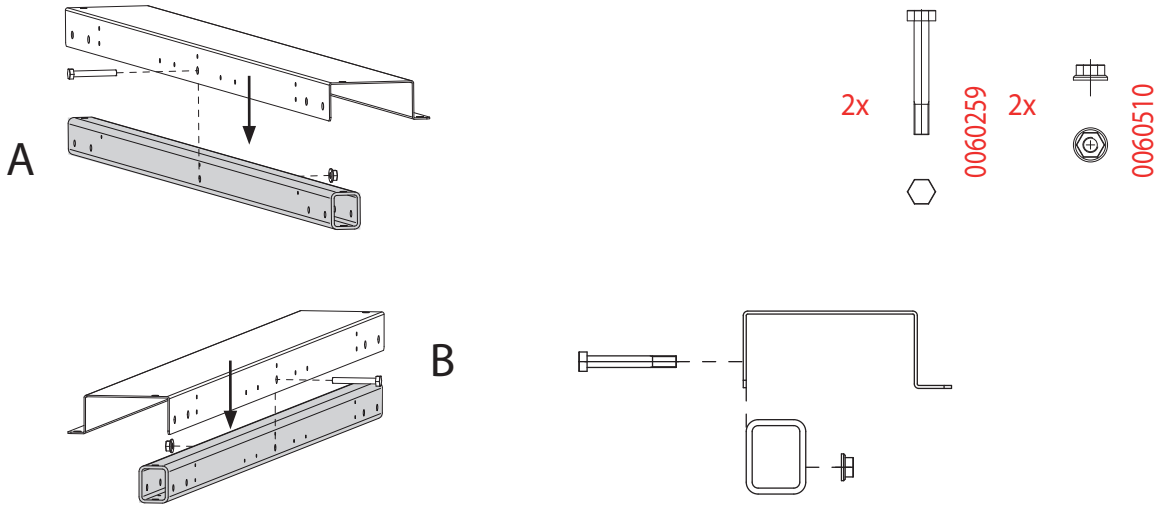

2

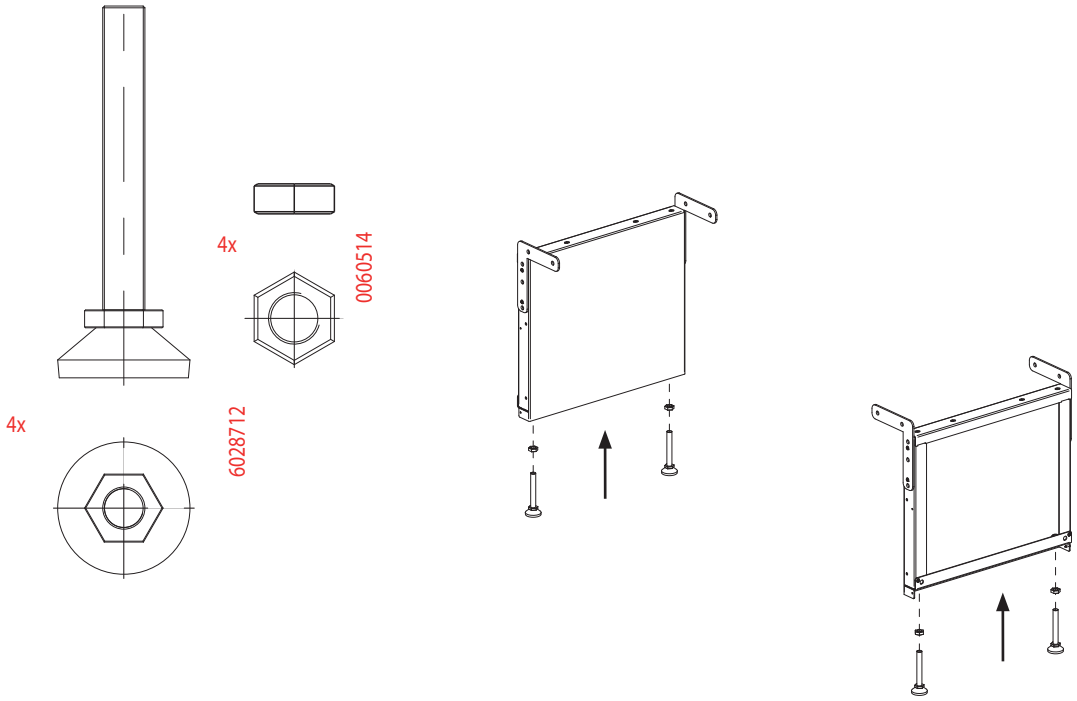

3

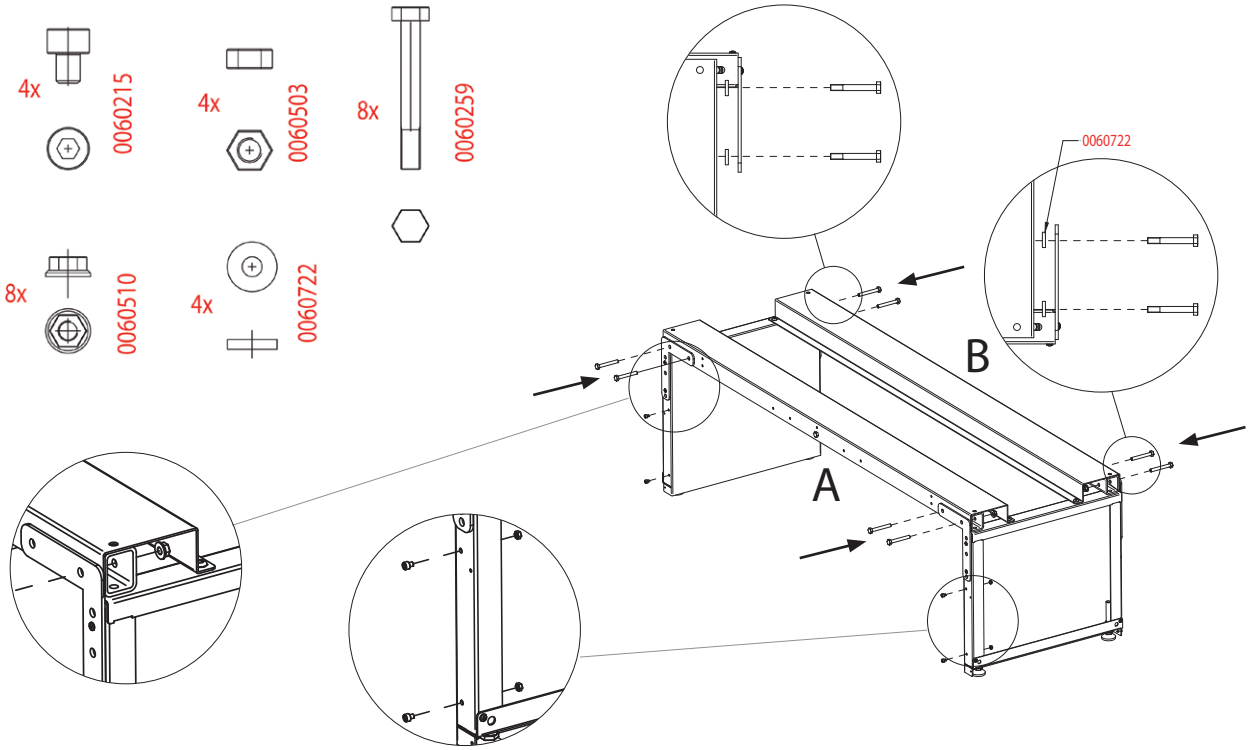
4x
0060215
4x
0060503
8x
0060259
8x
0060510
4x
0060722
0060722
A
B

4

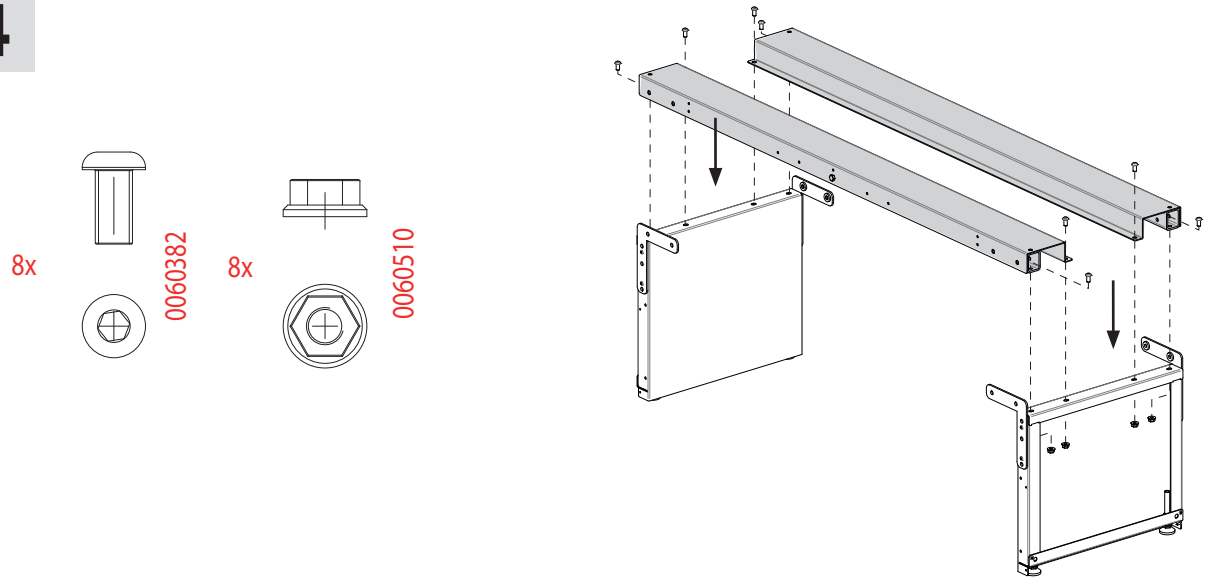
8x
0060382
8x
0060510

5

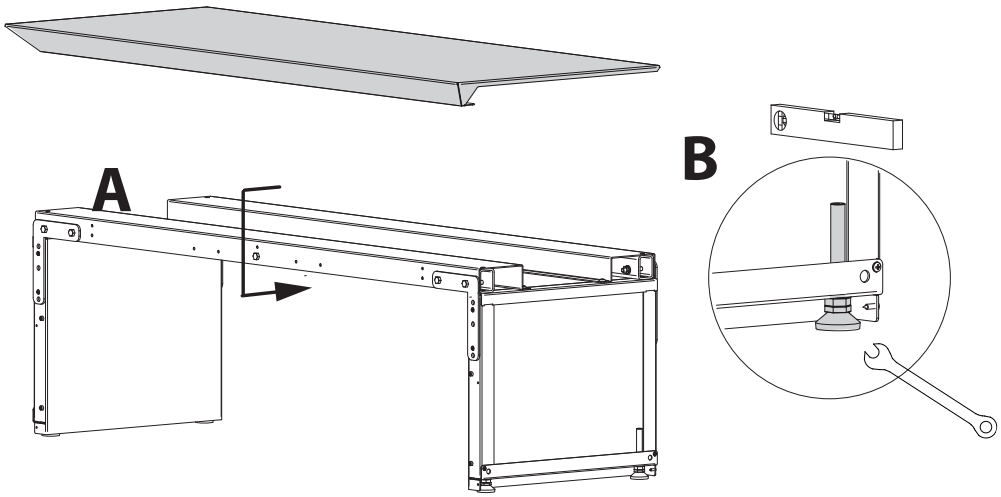
A
B

6

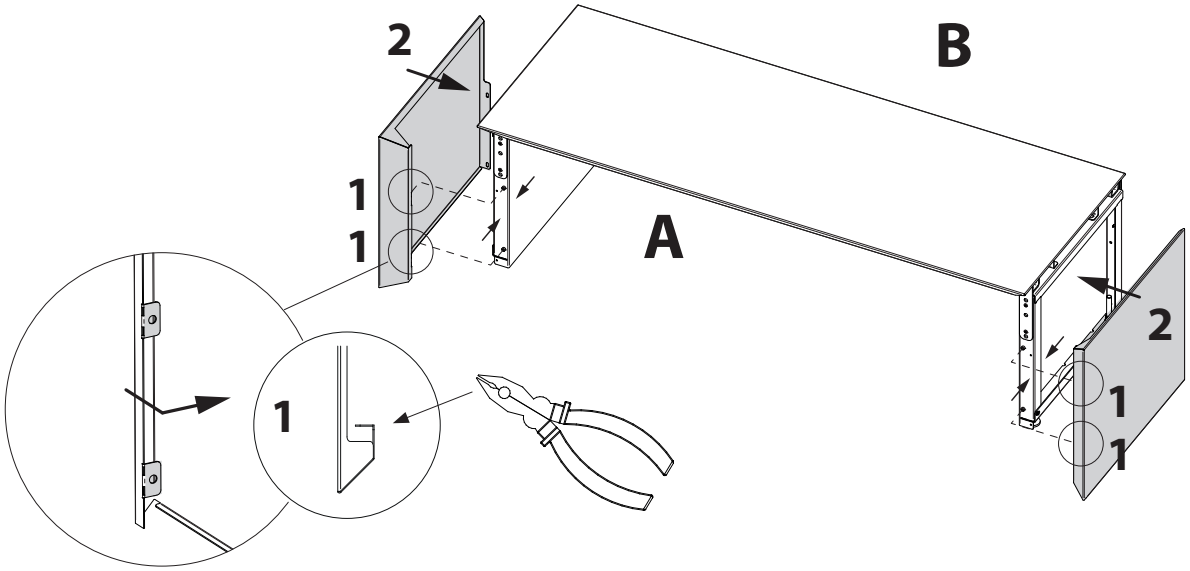

7

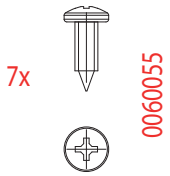

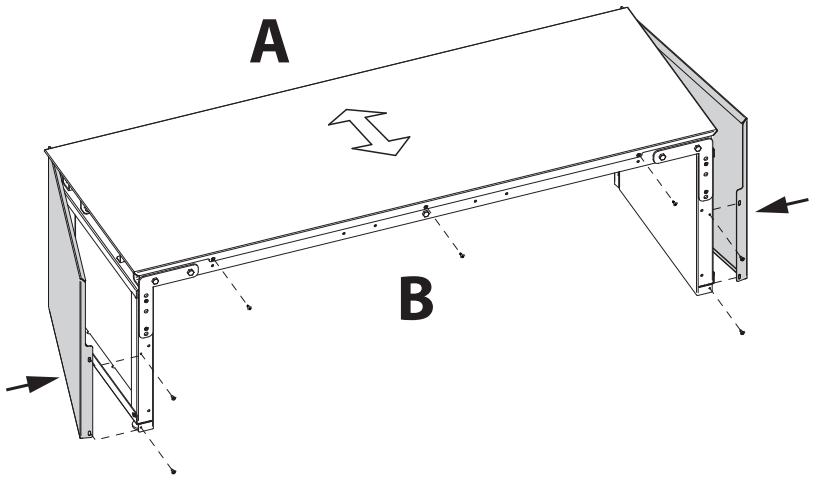

8

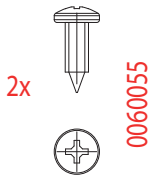

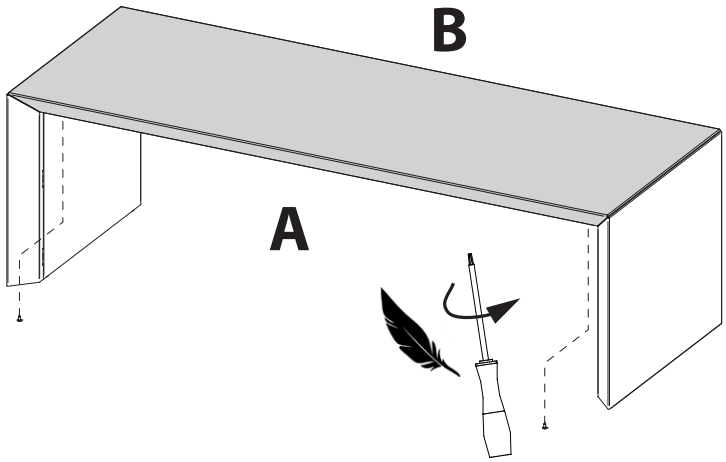

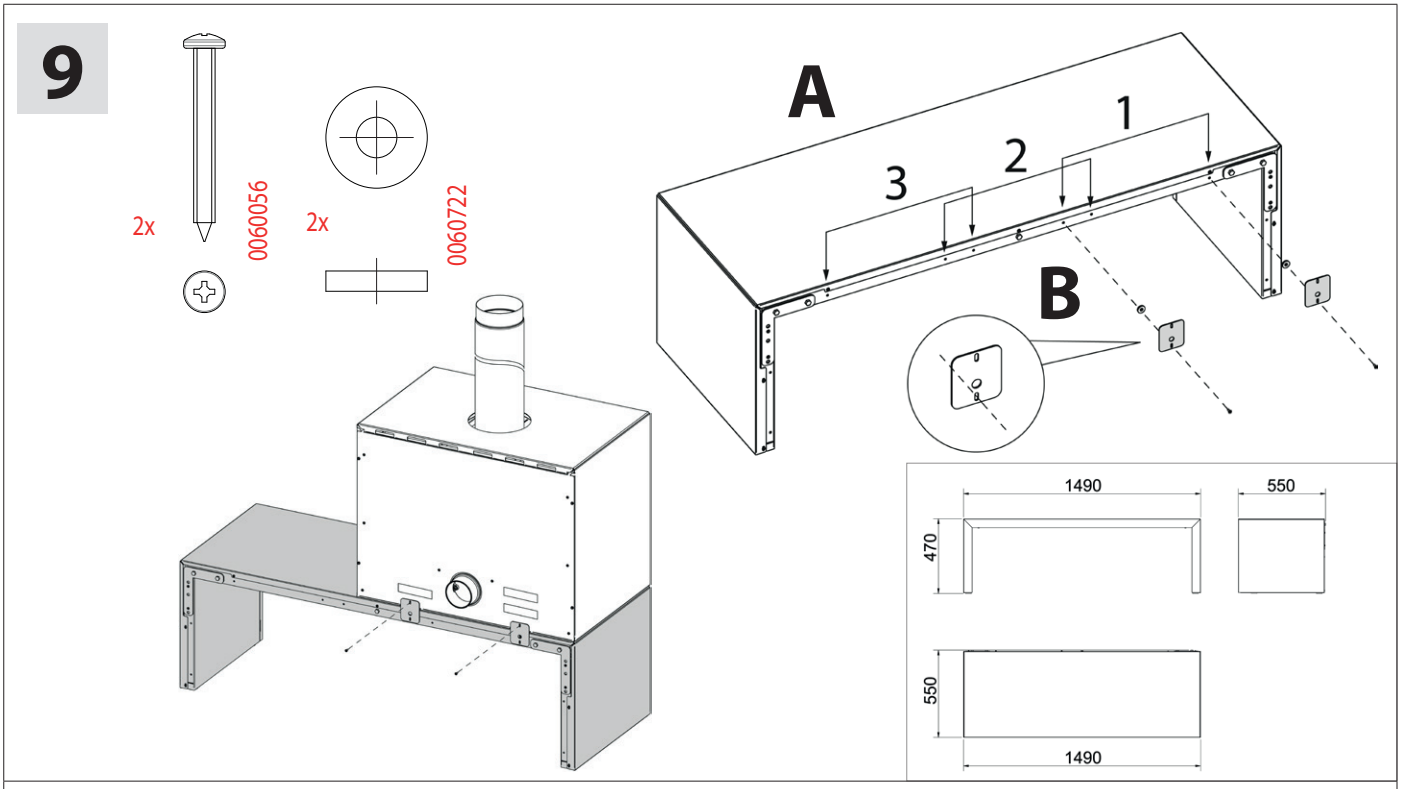

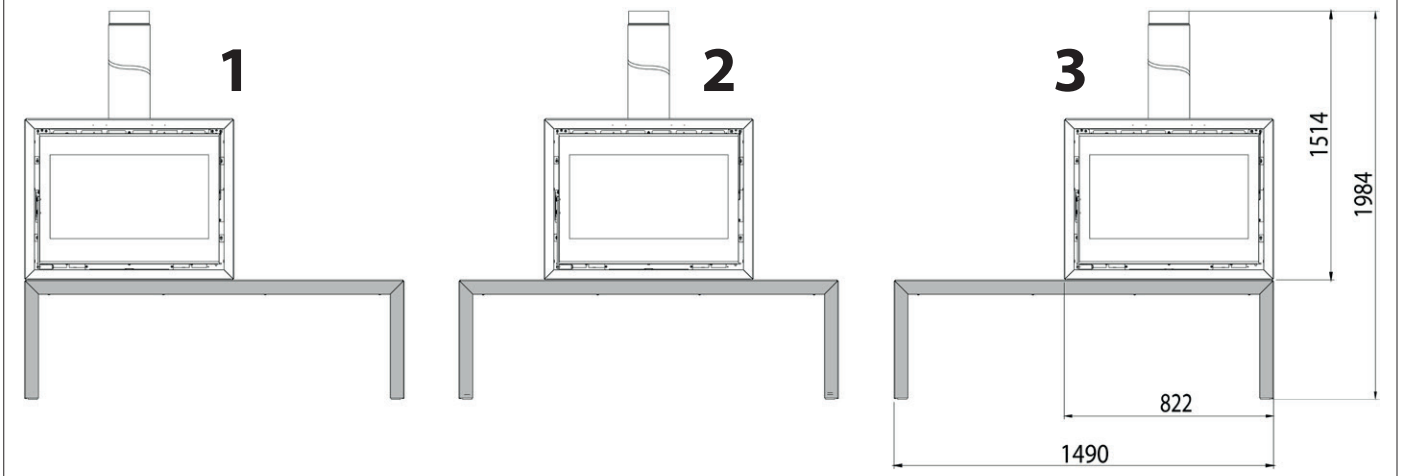

ATTENZIONE:
DURANTE LA COMBUSTIONE VIENE SPRIGIONATA ENERGIA TERMICA CHE COMPORTA UN MARCATO RISCALDAMENTO DELLE SUPERFICI METALLICHE DEI FIANCHI E DELLA PANCA. PER QUESTO MOTIVO È VIETATO SEDERSI O APPOGGIARSI DURANTE IL FUNZIONAMENTO, FATE IN MODO CHE I BAMBINI SIANO CONSAPEVOLI DI QUESTO PERICOLO.

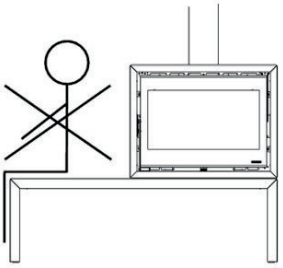

ATTENTION:
DURING COMBUSTION, THERMAL ENERGY IS RELEASED WHICH LEADS TO CONSIDERABLE HEATING OF THE METAL SURFACES, SIDES AND BENCH. FOR THIS REASON IT IS IMPORTANT NOT TO SIT DOWN OR LEAN ON DURING THE FUNCTIONING. ENSURE CHILDREN ARE AWARE OF THESE DANGERS.

VORSICHT:
BEI DER VERBRENNUNG WIRD WÄRMEENERGIE FREIGESETZT, DIE EINE ERHEBLICHE ERWÄRMUNG DER METALLISCHE OBERFLACHEN DER SEITEN UND DER BANK FÜHRT. AUS DIESEM GRUND IST DAS SITZEN ODER LIEGEN WÄHREND DES BETRIEBS VERBOTEN. MACHEN SIE DEN KINDERN DIESE GEFAHREN BEWUSST.

ATENCIÓN:
DURANTE LA COMBUSTIÓN SE DESARROLLA UNA ENERGÍA TÉRMICA QUE IMPLICA UN MARCADO CALENTAMIENTO DE LAS SUPERFICIES METÁLICAS DE LOS LADOS Y DEL BANCO. POR ESTA RAZÓN, ESTÁ PROHIBIDO SENTARSE O APOYARSE DURANTE EL FUNCIONAMIENTO. INFORME A LOS NIÑOS ACERCA DE ESTO PELIGRO.

ATTENTION:
LORS DE LA COMBUSTION, DE L'ÉNERGIE THERMIQUE EST LIBÉRÉE ET CAUSE UN RÉCHAUFFEMENT IMPORTANT DES SURFACES MÉTALLIQUES DES CÔTÉS ET DU BANC. POUR CETTE RAISON, IL EST INTERDIT DE S'ASSEOIR OU DE S'APPUYER SUR LE BANC PENDANT LE FONCTIONNEMENT. VEILLEZ À CE QUE LES ENFANTS SOIENT CONSCIENTS DE CE DANGER.

MANUFACTURER'S DECLARATION OF CONFORMITY

SUBJECT: ABSENCE OF ASBESTOS AND CADMIUM

IT IS HEREBY DECLARED THAT ALL APPLIANCES ARE ASSEMBLED USING MATERIALS THAT DO NOT CONTAIN ASBESTOS OR ASBESTOS DERIVATIVES AND THAT CADMIUM IS NOT PRESENT OR USED IN ANY FORM IN THE FILLER MATERIAL USED FOR WELDING, IN FULL COMPLIANCE WITH THE RELEVANT STANDARD.

GENERAL NOTICES

LA NORDICA S.p.A's LIABILITY IS LIMITED TO THE SUPPLY OF THE APPLIANCE.

THE INSTALLATION MUST BE CARRIED OUT IN COMPLIANCE WITH INDUSTRY BEST PRACTICES, IN ACCORDANCE WITH THE PROVISIONS SET FORTH IN THESE INSTRUCTIONS AND PROFESSIONAL STANDARDS, BY QUALIFIED PERSONNEL ACTING ON BEHALF OF COMPANIES CAPABLE OF ASSUMING FULL RESPONSIBILITY FOR THE ENTIRE SYSTEM.
LA NORDICA S.p.A. IS NOT RESPONSIBLE FOR ANY UNAUTHORISED MODIFICATIONS TO THE PRODUCT, NOR FOR THE USE OF NON-ORIGINAL SPARE PARTS.

This appliance is not suitable for use by individuals (including children) with reduced physical, sensory or mental capabilities, or those lacking experience and knowledge, unless they are supervised and instructed in the use of the appliance by a responsible person ensuring their safety. Children must be supervised to ensure they do not play with the appliance (EN 60335-2-102 / 7.12).
IT IS MANDATORY TO COMPLY WITH NATIONAL AND EUROPEAN STANDARDS, AS WELL AS LOCAL BUILDING REGULATIONS AND FIRE SAFETY REGULATIONS.

DO NOT PLACE FOOD DIRECTLY ON THE KITCHEN / STOVE SURFACES OR ON THE ACCESSORIES SUPPLIED: ALWAYS PLACE SUITABLE MATERIALS FOR CONTACT WITH FOOD BETWEEN THE SURFACES AND THE FOOD

NO MODIFICATIONS TO THE APPLIANCE ARE PERMITTED. LA NORDICA S.P.A. DISCLAIMS ALL LIABILITY FOR ANY FAILURE TO OBSERVE THESE PRECAUTIONS.

THIS INSTRUCTION MANUAL FORMS AN INTEGRAL PART OF THE PRODUCT. ENSURE THAT IT REMAINS WITH THE APPLIANCE AT ALL TIMES, EVEN IN THE EVENT OF SALE, TRANSFER TO ANOTHER OWNER OR USER, OR RELOCATION TO ANOTHER PREMISES. IF IT IS LOST OR DAMAGED, REQUEST A REPLACEMENT FROM YOUR LOCAL TECHNICAL SERVICE PROVIDER. THIS PRODUCT MUST BE USED ONLY FOR ITS EXPRESSLY INTENDED PURPOSE. THE MANUFACTURER ACCEPTS NO CONTRACTUAL OR EXTRA-CONTRACTUAL LIABILITY FOR DAMAGES TO PERSONS, ANIMALS, OR PROPERTY CAUSED BY INCORRECT INSTALLATION, IMPROPER ADJUSTMENT OR MAINTENANCE, AND MISUSE OF THE APPLIANCE.

INSTALLATION MUST BE CARRIED OUT BY QUALIFIED AND AUTHORISED PERSONNEL, WHO WILL ASSUME FULL RESPONSIBILITY FOR THE FINAL INSTALLATION AND PROPER OPERATION OF THE PRODUCT. ALL NATIONAL, REGIONAL, PROVINCIAL AND LOCAL LAWS AND REGULATIONS IN THE COUNTRY WHERE THE APPLIANCE IS INSTALLED, AS WELL AS THE INSTRUCTIONS IN THIS MANUAL, MUST BE CONSIDERED.
THE USE OF THE APPLIANCE MUST COMPLY WITH ALL LOCAL, REGIONAL, NATIONAL AND EUROPEAN REGULATIONS.
THE MANUFACTURER ACCEPTS NO LIABILITY IF THESE PRECAUTIONS ARE NOT FOLLOWED.

AFTER UNPACKING, CHECK FOR ANY DAMAGE OR MISSING PARTS. IF THE APPLIANCE DOES NOT MEET EXPECTATIONS, CONTACT THE RETAILER WHERE IT WAS PURCHASED.
ALL ELECTRICAL COMPONENTS (WHERE PRESENT) COMPRISING THE PRODUCT, AND WHICH ARE ESSENTIAL FOR ITS PROPER FUNCTIONING, MUST ONLY BE REPLACED WITH ORIGINAL SPARE PARTS BY AN AUTHORISED TECHNICAL SERVICE CENTRE.

SAFETY

- **THIS APPLIANCE MAY BE USED BY CHILDREN AGED 8 AND ABOVE, AS WELL AS INDIVIDUALS WITH REDUCED PHYSICAL, SENSORY OR MENTAL CAPABILITIES, OR THOSE WITHOUT EXPERIENCE OR KNOWLEDGE, PROVIDED THEY ARE SUPERVISED OR HAVE RECEIVED INSTRUCTIONS ON THE SAFE USE OF THE APPLIANCE AND**

UNDERSTAND THE POTENTIAL HAZARDS. CHILDREN MUST BE SUPERVISED TO ENSURE THEY DO NOT PLAY WITH THE APPLIANCE. CLEANING AND MAINTENANCE INTENDED TO BE PERFORMED BY THE USER MUST NOT BE CARRIED OUT BY CHILDREN WITHOUT SUPERVISION.

- DO NOT TOUCH THE HEATER WITH BARE FEET OR WITH WET OR DAMP BODY PARTS.
- MODIFICATIONS TO THE APPLIANCE ARE STRICTLY PROHIBITED.
- DO NOT PULL, DISCONNECT OR TWIST THE ELECTRICAL CABLES PROTRUDING FROM THE APPLIANCE (IF PRESENT), EVEN WHEN THE UNIT IS UNPLUGGED.
- ENSURE THAT THE POWER CORD (IF PRESENT) IS POSITIONED SO THAT IT DOES NOT COME INTO CONTACT WITH HOT PARTS OF THE APPLIANCE.
- THE POWER PLUG MUST REMAIN ACCESSIBLE AFTER INSTALLATION.
- DO NOT CLOSE OR REDUCE THE SIZE OF THE AIRING VENTS IN THE INSTALLATION SITE, AS THESE ARE ESSENTIAL FOR PROPER COMBUSTION.
- DO NOT LEAVE PACKAGING ITEMS WITHIN REACH OF CHILDREN OR UNASSISTED INCAPACITATED PERSONS.
- THE COMBUSTION CHAMBER DOOR MUST ALWAYS REMAIN CLOSED DURING OPERATION AND SHOULD ONLY BE OPENED FOR FUEL LOADING, IGNITION AND CLEANING.
- WHEN THE APPLIANCE IS IN OPERATION, ALL EXTERNAL SURFACES BECOME HOT, THEREFORE, EXERCISE CAUTION
- BEFORE RESTARTING THE APPLIANCE AFTER A LONG PERIOD OF NON-USE, CHECK FOR OBSTRUCTIONS.
- IN THE EVENT OF A FLUE FIRE, USE APPROPRIATE FIRE SUPPRESSION METHODS OR CALL THE FIRE BRIGADE.
- THIS APPLIANCE MUST NOT BE USED AS A WASTE INCINERATOR
- NEVER USE PETROL, KEROSENE, LIGHTER FLUID, ETHANOL OR SIMILAR LIQUIDS TO START OR RESTART THE HEATER.
- MAJOLICA TILES (WHERE PRESENT) ARE HIGH-QUALITY HANDCRAFTED PRODUCTS AND MAY THEREFORE EXHIBIT MINOR SPECKLING, CRAZING OR SLIGHT COLOUR IMPERFECTIONS. THESE CHARACTERISTICS ATTEST TO ITS HIGH-QUALITY NATURE. DUE TO THE DIFFERENT EXPANSION COEFFICIENTS OF ENAMEL AND MAJOLICA, MICRO-CRACKS (CRAZING) MAY APPEAR, PROVING THEIR AUTHENTICITY. TO CLEAN MAJOLICA SURFACES, USE A SOFT, DRY CLOTH. IF ANY CLEANING AGENTS OR LIQUIDS ARE USED, THEY MAY PENETRATE THE MICRO-CRACKS, MAKING THEM MORE VISIBLE.

FIRE SAFETY

MINIMUM CLEARANCES

Installation next to combustible or heat-sensitive materials is permitted, **provided that suitable safety distances are maintained, as** specified in the CEMI (CE Marking Information), the Declaration of Performance (DoP) and **the label at the beginning of the manual (page 2).**

ALL NATIONAL, REGIONAL, PROVINCIAL AND LOCAL LAWS AND REGULATIONS IN THE COUNTRY WHERE THE APPLIANCE IS INSTALLED, AS WELL AS THE INSTRUCTIONS IN THIS MANUAL, MUST BE CONSIDERED.

DURING INSTALLATION, THE FOLLOWING SAFETY MEASURES MUST BE OBSERVED:

a) To ensure adequate thermal insulation, maintain the minimum safety distance at the rear (d_R) and on both sides (d_S) from flammable or heat-sensitive materials (e.g. furniture, wooden cladding, fabrics, etc.). **THESE DISTANCES MUST FALL BELOW THE SPECIFIED VALUES;**

b) In front of the firebox door, within its radiation area, there must be no combustible or heat-sensitive objects or construction materials at a distance of less than d_P. This distance may be reduced to 400 mm if a rear-ventilated, heat-resistant protective screen is installed in front of the entire surface to be protected;

c) **IF THE PRODUCT IS INSTALLED ON A FLAMMABLE FLOOR** (such as carpet, parquet, cork, etc.)**, THE FLOOR MUST BE PROTECTED WITH A NON-COMBUSTIBLE COVERING,** such as ceramic, stone, glass or steel, etc**.** The non-combustible protective material must: cover the area beneath the appliance and extend forward by at least the distance specified as d_F; sideward by at least the distance specified as d_S; and rearward by at least the distance specified as d_R. These distances ensure effective and safe protection;

d) Above the product, within the distance specified as d_C, THERE MUST BE NO FLAMMABLE MATERIALS (e.g. furniture, overhead cabinets);

e) **IF THE PRODUCT IS INSTALLED IN DIRECT CONTACT WITH A WALL MADE OF FLAMMABLE MATERIAL, THE AFFECTED SECTION OF THE WALL MUST BE PROTECTED WITH A LAYER OF NON-FLAMMABLE MATERIAL**, such as ceramic, stone, glass or steel etc. The protection must cover the rear area of the product and extend sideward at least as far as the distance indicated as d_S and vertically at least as far as the distance indicated as d_C;

f) For non-flammable materials, a minimum side and rear clearance must be maintained, as indicated by the distance marked d_{non}.

THE PRODUCT MUST OPERATE EXCLUSIVELY WITH THE ASH DRAWER INSERTED. THE SOLID COMBUSTION RESIDUE (ASHES) MUST BE COLLECTED IN AN AIRTIGHT, FIRE-RESISTANT CONTAINER. THE PRODUCT MUST NEVER BE IGNITED IN THE PRESENCE OF GASEOUS EMISSIONS OR VAPOURS (FOR EXAMPLE, LINOLEUM GLUE, PETROL, ETC.). DO NOT STORE FLAMMABLE MATERIALS NEAR THE PRODUCT.

DURING COMBUSTION, THERMAL ENERGY IS RELEASED, CAUSING SIGNIFICANT HEATING OF THE SURFACES, DOORS, HANDLES, CONTROLS, GLASS, FLUE PIPE AND POTENTIALLY THE FRONT SECTION OF THE APPLIANCE. AVOID CONTACT WITH THESE COMPONENTS WITHOUT SUITABLE PROTECTIVE CLOTHING OR ACCESSORIES (HEAT-RESISTANT GLOVES, CONTROL DEVICES).
ENSURE THAT CHILDREN ARE AWARE OF THESE DANGERS AND KEEP THEM AWAY FROM THE FIREBOX DURING ITS OPERATION.

WHEN USING INCORRECT OR OVERLY MOIST FUEL, TAR DEPOSITS (CREOSOTE) CAN FORM INSIDE THE FLUE, INCREASING THE RISK OF FIRE.

IN CASE OF FAULTS

The steps to follow to safely switch off the appliance in the event of a malfunction are:

Broken glass door	Discontinue use of the product and contact the authorised service centre
Overheating of certain parts of the appliance or the flue pipe	Immediately stop loading the firewood, do not open the door, close the air intake dampers until the fire extinguishes, contact the authorised service centre in case of repeated overheating.

Broken internal baffles	Discontinue use of the product and contact the authorised service centre
Weak and/or smothered flame	Check the seals and ensure the firewood is not too damp, contact the authorised service centre
In case of adverse weather conditions	Monitor the combustion process
Smoke escaping when the door is opened	Check the pressure difference between the rooms where the heater is installed and the outside; the value must always be ≥ -4 Pa

FIRST-AID MEASURES

IF A FIRE OCCURS IN THE CONNECTION OR FLUE :

a) Close the loading door and the ash drawer.
b) Close the combustion air dampers
c) Extinguish the fire using carbon dioxide (CO_2 powder) extinguishers
d) Immediately call the fire brigade

DO NOT EXTINGUISH FIRE WITH WATER JETS.
WHEN THE FLUE STOPS BURNING, IT MUST BE INSPECTED BY A SPECIALIST TO IDENTIFY ANY CRACKS OR LEAKAGE POINTS.

INSTALLATION REGULATIONS

THE INSTALLATION OF THE PRODUCT AND ITS AUXILIARY EQUIPMENT RELATED TO THE HEATING SYSTEM, MUST COMPLY WITH ALL CURRENT STANDARDS AND REGULATIONS, AS WELL AS LEGAL REQUIREMENTS.

THE INSTALLATION, SYSTEM CONNECTIONS, COMMISSIONING AND OPERATIONAL TESTING MUST BE CARRIED OUT IN COMPLIANCE WITH BEST PRACTICES BY PROFESSIONAL, QUALIFIED PERSONNEL, ENSURING FULL ADHERENCE TO NATIONAL, REGIONAL, PROVINCIAL AND MUNICIPAL REGULATIONS IN THE COUNTRY WHERE THE APPLIANCE IS INSTALLED, AS WELL AS THESE INSTRUCTIONS.

THE INSTALLATION MUST BE CARRIED OUT BY AUTHORISED PERSONNEL, WHO MUST ISSUE THE PURCHASER WITH A DECLARATION OF CONFORMITY FOR THE SYSTEM, AND ASSUME FULL RESPONSIBILITY FOR THE FINAL INSTALLATION AND THE PROPER FUNCTIONING OF THE INSTALLED PRODUCT.

The product is pre-assembled and ready for connection and must be connected via a connector to the pre-existing building flue. The connector should ideally be short, straight, horizontal or slightly inclined upwards. All connections must be airtight.

Before installation, perform the following checks:

- Hot air ducting (if present).
- Determine the type of ventilation (natural or forced – see chapter HOOD OR ADJACENT ROOM VENTILATION - if present)
- Check the load-bearing capacity of the structure to ensure it can support the weight of the appliance. If the load-bearing capacity is insufficient, appropriate measures must be taken. **LA NORDICA S.p.A.**'s responsibility is limited to supplying the appliance only (see technical data in the document "CE MARKING INFORMATION").
- Ensure that the floor can support the weight of the appliance; if made of flammable material, appropriate insulation must be provided.
- Check that the room where the appliance will be installed is suitably ventilated, paying attention in particular to airtight doors and windows (with sealing gaskets).
- AVOID INSTALLATION IN ROOMS WITH SHARED VENTILATION DUCTS, KITCHEN HOODS (WITH OR WITHOUT EXTRACTORS), TYPE B GAS APPLIANCES, HEAT PUMPS, OR ANY OTHER APPLIANCES WHOSE SIMULTANEOUS OPERATION COULD CREATE NEGATIVE PRESSURE IN THE ROOM (see **UNI 10683 Standard**). **Under all conditions, including the presence of extractor hoods and/or controlled forced ventilation systems, the pressure difference between the rooms where the heater is installed and the outside must always be ≥ -4 Pa (e.g. - 3 Pa is an acceptable value).**
- Check that the flue and pipes to which the appliance will be connected are suitable (see the technical data in the document "CE MARKING INFORMATION").
- The diameter of the opening for the connection to the chimney must at least correspond to the diameter of the flue pipe. The opening should be equipped with a wall connection for inserting the exhaust pipe and a rosette.
- The unused flue exhaust hole must be sealed with the appropriate cap (if present).
- The installation must allow access for cleaning and maintenance of both the product and the flue.
- Use a spirit level to ensure that the appliance is perfectly level, allowing for the proper movement of the door (if a sliding door is present). Adjust the levelling feet (if present).

LA NORDICA S.p.A. DISCLAIMS ALL LIABILITY FOR DAMAGE TO PROPERTY AND/OR PERSONS CAUSED BY THE INSTALLATION. FURTHERMORE, THE COMPANY IS NOT RESPONSIBLE FOR ANY UNAUTHORISED MODIFICATIONS TO THE PRODUCT, NOR FOR THE USE OF NON-ORIGINAL SPARE PARTS.

MAINTENANCE PROVISIONS

For non-routine maintenance of the product, it may be necessary to move it away from the adjacent walls. This operation must be carried out by a qualified technician, authorised to disconnect and subsequently reconnect the exhaust ducts for combustion products. For heaters connected to a water system, the connection between the system and the product must be such as to allow a qualified technician to move the heater at least 1 metre away from adjacent walls during non-routine maintenance

VENTILATION AND AERATION OF THE INSTALLATION AREA

AS THESE PRODUCTS DRAW COMBUSTION AIR FROM THE INSTALLATION ROOM, IT IS **MANDATORY** TO ENSURE A SUFFICIENT SUPPLY OF FRESH AIR WITHIN THE ROOM ITSELF. IN THE CASE OF AIRTIGHT WINDOWS AND DOORS (E.G. ENERGY-EFFICIENT HOMES), THE SUPPLY OF FRESH AIR MAY NO LONGER BE GUARANTEED, WHICH CAN COMPROMISE THE APPLIANCE'S DRAUGHT, USER COMFORT AND SAFETY.

IMPORTANT: For improved air quality and proper oxygenation of the environment, combustion air can be drawn directly from the outside via a connection to a flexible hose. The connecting pipe (NOT supplied) must be smooth and have a minimum diameter as specified in (**Figure 2**). Its maximum length must not exceed 3 m for STOVES and COOKERS and 4 m for FIREPLACES, with no more than three bends. If this hose is connected directly to the outside, it must be equipped with a windbreak.

FOR PROPER OPERATION OF THE APPLIANCE, IT IS MANDATORY TO ENSURE AN ADEQUATE SUPPLY OF AIR IN THE INSTALLATION AREA, BOTH FOR COMBUSTION AND FOR RE-OXYGENATION OF THE ROOM.

This means that, through dedicated openings communicating with the outside, combustion air must be able to circulate even when doors and windows are closed.
The air intakes must meet the following requirements:

- BE PROTECTED USING GRATES, WIRE MESH, ETC., WITHOUT REDUCING THE NET FREE SECTION;
- BE DESIGNED TO ALLOW FOR MAINTENANCE OPERATIONS;
- BE POSITIONED IN A WAY THAT PREVENTS OBSTRUCTION;
- IF EXTRACTOR HOODS ARE PRESENT IN THE INSTALLATION ROOM, THEY MUST NOT BE USED SIMULTANEOUSLY WITH THE APPLIANCE. These may cause smoke to escape into the room, even when the firebox door is closed.

Fresh, uncontaminated air intake can also be provided from an adjacent room (indirect ventilation and airing), provided the airflow is unobstructed through permanent openings connected to the outside.
THE ADJACENT ROOM MUST NOT BE USED AS A GARAGE, STORAGE AREA FOR COMBUSTIBLE MATERIALS, HIGH FIRE-RISK AREA, BATHROOM, BEDROOM OR SHARED/COMMON AREA OF THE BUILDING.

Ventilation is considered sufficient when the room is equipped with air intakes according to the table:

Appliance categories	Reference standard	Required net opening cross-section as a percentage of the appliance's flue gas outlet	Minimum net opening size of the ventilation duct
Fireplaces	EN 16510-2-2	50 %	200 cm^2
Stoves	EN 16510-2-1	50 %	100 cm^2
Cookers	EN 16510-2-3	50 %	100 cm^2

INSTALLATION IS PROHIBITED IN ROOMS WITH A FIRE HAZARD. INSTALLATION IS ALSO PROHIBITED IN RESIDENTIAL ROOMS WHERE THE MEASURED PRESSURE DIFFERENCE BETWEEN THE INDOOR AND OUTDOOR ENVIRONMENT EXCEEDS 4 Pa – REFERENCE FOR ITALY ACCORDING TO UNI 10683 REGULATIONS.
UNDER ALL CONDITIONS, INCLUDING THE PRESENCE OF EXTRACTOR HOODS AND/OR CONTROLLED FORCED VENTILATION SYSTEMS, THE PRESSURE DIFFERENCE BETWEEN THE ROOMS WHERE THE HEATER IS INSTALLED AND THE OUTSIDE MUST ALWAYS BE ≥ -4 Pa (E.G. -3 Pa IS AN ACCEPTABLE VALUE).

IT IS MANDATORY TO COMPLY WITH ALL NATIONAL, REGIONAL, PROVINCIAL AND LOCAL LAWS AND REGULATIONS IN THE COUNTRY WHERE THE APPLIANCE IS INSTALLED.

Figure 2

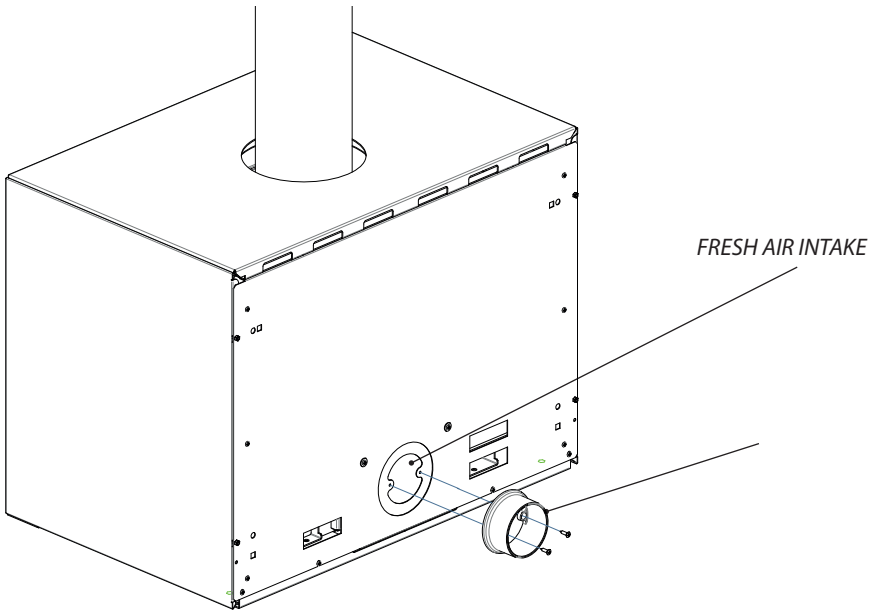

PERMITTED/NOT PERMITTED FUELS

Only logs may be used as fuel. Only dry logs (max. moisture content 20%) should be used. A maximum of 2 or 3 logs should be loaded at a time. Logs should be approximately 20–30 cm in length and have a maximum circumference of 30–35 cm.

NON-RESINOUS PRESSED WOOD LOGS MUST BE USED WITH CAUTION TO AVOID OVERHEATING THAT COULD DAMAGE THE APPLIANCE, AS THEY HAVE A HIGH HEATING VALUE.

The firewood must have a moisture content of less than 20% and be stored in a dry location. Damp wood makes ignition more difficult, as more energy is required to evaporate the moisture present. The moisture content also creates the disadvantage that, as the temperature drops, the water condenses first in the firebox and then in the chimney, causing a considerable deposit of soot with the subsequent possible risk of fire.
Freshly cut wood contains about 60% H_2O, making it unsuitable for burning. It must be stored in a dry, ventilated area (e.g. under a shelter) for at least two years before use.

THE FOLLOWING MATERIALS MUST NOT BE BURNED: COAL, WOOD SCRAPS, BARK RESIDUE, WOOD PANELS, DAMP OR PAINTED WOOD, PLASTICS. USING THESE MATERIALS WILL VOID THE PRODUCT WARRANTY.

PAPER AND CARDBOARD SHOULD ONLY BE USED FOR IGNITION.

BURNING WASTE IS STRICTLY PROHIBITED AS IT MAY DAMAGE THE APPLIANCE AND THE FLUE, CAUSE HEALTH RISKS AND LEAD TO COMPLAINTS FROM NEIGHBOURS DUE TO UNPLEASANT ODOURS.

Wood is not a long-burning fuel, meaning continuous heating throughout the night is not possible.

Species	kg/m³	kWh/kg 20% Moisture
Beech	750	4.0
Turkey oak	900	4.2
Elm	640	4.1
Poplar	470	4.1
Larch*	660	4.4
Spruce*	450	4.5
Scots pine *	550	4.4

* UNSUITABLE RESINOUS WOODS

THE CONTINUOUS AND PROLONGED USE OF FIREWOOD THAT IS PARTICULARLY RICH IN AROMATIC OILS (E.G., EUCALYPTUS, MYRTLE, ETC.) CAUSES THE RAPID DETERIORATION (FLAKING) OF THE CAST-IRON COMPONENTS IN THE PRODUCT.

The declared technical data were obtained using class "A1" beech wood in accordance with UNI EN ISO 17225-5, with a moisture content of less than 20%. The use of other wood types may require specific adjustments and could result in different product performance.

CALCULATION OF THE HEAT OUTPUT

There is no absolute rule for calculating the correct power required. This power depends on the space to be heated, but is also largely influenced by the level of insulation.
On average, the heat output required for a properly insulated room will be 30 kcal/h per m3 (for an outside temperature of 0 °C).
Since 1 kW corresponds to 860 kcal/h, we can assume a value of 35 W/m3.
Assuming you wish to heat a 150 m3 (10 x 6 x 2.5 m) room in an insulated house, you will need 150 m3 x 35 W/m3 = 5250 W or 5.25 kW. As a primary heating source, an 8 kW appliance should be sufficient.

		Indicative combustion value		Required quantity in relation to 1 kg of dry wood
Fuel	Unit	kcal/h	kW	
Dry wood (15% moisture)	kg	3600	4.2	1.00
Wet wood (50% moisture)	kg	1850	2.2	1.95
Wood briquettes	kg	4000	5.0	0.84
Brown coal briquettes	kg	4800	5.6	0.75
Normal anthracite	kg	7700	8.9	0.47
Coke	kg	6780	7.9	0.53
Natural gas	m³	7800	9.1	0.46
Naphtha	L	8500	9.9	0.42
Electricity	kWh	860	1.0	4.19

FLUE EXHAUST

FLUE PIPE

THE COMPONENTS OF THE COMBUSTION GAS EVACUATION SYSTEM MUST BE SELECTED AND RATED IN ACCORDANCE WITH CURRENT REGULATIONS, CONSIDERING THE SPECIFIC INSTALLATION CONDITIONS.

The following checks are recommended:

- The chimney system must be assessed in accordance with the following technical standards (where applicable): EN 15287-1, EN 15287-2, EN 13063-1, EN 13063-2, EN 1457, EN 1806, EN 1856-1, EN 1856-2, and EN 13384-1;
- The proper operation of the chimney system must be verified in accordance with EN 13384-2, based on the specific installation conditions;
- The number of directional changes, including those caused by the use of T-joints, must not exceed four;
- A T-joint with a condensate collection cap must be installed at the base of the vertical section;
- The vertical duct may be located either inside or outside the building. If the flue pipe is connected to an existing flue, it must be certified for solid fuels;
- The flue pipe must include at least one airtight port for potential flue gas sampling;
- All sections of the flue pipe must be accessible for inspection;
- Inspection openings must be provided for cleaning;

When using metal pipes, the following requirements (EN 1856-1 and EN 1856-2) must be met:

FLUE - Temperature class, at least T 600 G (as stated in the technical data sheet), soot-fire resistant.

FLUE PIPE - Temperature class, at least T 600 G (as stated in the technical data sheet), soot-fire resistant.

The flue pipe is the section of piping that connects the appliance to the flue. When connecting it, the following simple but crucial principles must be observed:

- Under no circumstances should the flue pipe have a diameter smaller than that of the appliance's outlet collar. The internal diameter of the connecting pipe must match the external diameter of the appliance's flue exhaust stub (DIN 1298);
- Each metre of horizontal flue pipe travelled causes a significant pressure loss, which must be compensated for by increasing the flue pipe height if necessary;
- Each bend in the flue pipe significantly reduces the flue draught, which must be offset by an adequate increase in height;
- A maximum of three direction changes of no more than 90° each is allowed, including the connection from the appliance to the chimney (UNI 10683). These must be easily inspectable;
- The horizontal length of the flue pipe must be kept to a minimum, and its total horizontal projection must not exceed 4 metres (UNI 10683);
- Horizontal sections must have a minimum upward slope of 3%;
- The use of flexible metal pipes, fibre cement pipes or aluminium pipes is strictly prohibited.
- The connection must be made with stable and robust pipes that comply with all current standards, regulations and legal requirements. The connection to the flue must also be airtight.

CAUTION: WHEN MAKING THE FLUE CONNECTION AND WORKING NEAR FLAMMABLE MATERIALS, FOLLOW THE REQUIREMENTS OF UNI 10683. THE FLUE MUST BE PROPERLY DISTANCED FROM FLAMMABLE OR COMBUSTIBLE MATERIALS USING SUITABLE INSULATION OR AN AIR GAP. MINIMUM CLEARANCE: 25 CM.

IMPORTANT: THE UNUSED FLUE EXHAUST HOLE MUST BE SEALED WITH THE RELATIVE CAP (SEE DETAILS CHAPTER).

FLUE

ESSENTIAL REQUIREMENTS FOR PROPER OPERATION OF APPLIANCE:

- The internal cross-section should preferably be circular;
- **It must be thermally insulated, waterproof and made of materials resistant to heat, combustion by-products and potential condensates;**
- It must be free of constrictions and have a predominantly vertical layout, with deviations not exceeding 45°;
- If previously used, it must be cleaned;
- All sections of the flue pipe must be accessible for inspection;
- Inspection openings must be provided for cleaning;
- Comply with the technical specifications outlined in the instruction manual;

IF THE FLUE HAS A SQUARE OR RECTANGULAR CROSS-SECTION, THE INTERNAL CORNERS MUST BE ROUNDED WITH A RADIUS OF NO LESS THAN 20 MM. FOR RECTANGULAR CROSS-SECTIONS, THE MAXIMUM SIDE RATIO MUST BE ≤ 1.5.

A cross-section that is too small will reduce the draught. A minimum height of 4 metres is recommended.
The following materials are **PROHIBITED**, as they compromise the proper functioning of the appliance: fibre cement, galvanised steel, rough or porous internal surfaces. (**Figure 3**) illustrates several possible solutions.

Figure 3	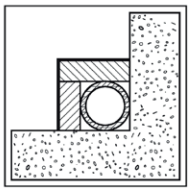 1	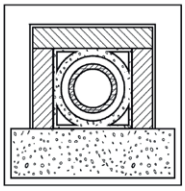 2	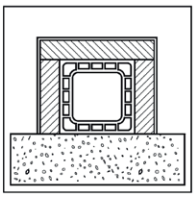 3	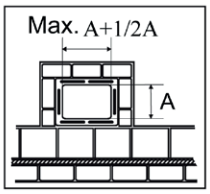 4
1*	Steel flue with insulated double chamber using material resistant to 400°C. **Efficiency 100% excellent.**			
2*	Refractory flue with insulated double chamber and external cladding in lightweight concrete. **Efficiency 100% excellent.**			
3*	Traditional clay flue with square cross-section and air gaps. **Efficiency 80% good.**			
4	Avoid flues with rectangular internal cross-section whose ratio differs from the design. **Efficiency 40% poor.**			
*- Material compliant with current Standards and Regulations, as well as legal requirements.				

FOR CORRECT INSTALLATION, THE FLUE DIMENSIONS MUST COMPLY WITH THE CE MARKING INFORMATION. FOR INSTALLATIONS WITH DIFFERENT DIMENSIONS, THE FLUE MUST BE SIZED IN ACCORDANCE WITH STANDARD EN13384-1.

A flue with an excessively large cross-section may generate a volume too large to be heated, thus causing operational difficulties for the appliance. To prevent this, it should be lined along its entire height. A cross-section that is too small will reduce the draught.

IT IS STRICTLY PROHIBITED TO ROUTE ANY OTHER SYSTEM PIPES OR AIR SUPPLY DUCTS INSIDE THE FLUE. ADDITIONALLY, IT IS PROHIBITED TO CREATE FIXED OR MOVABLE OPENINGS IN THE FLUE FOR THE CONNECTION OF ADDITIONAL UNRELATED APPLIANCES (SEE THE CHAPTER ON CONNECTING AN OPEN FIREPLACE OR FIREBOX TO THE FLUE).

THE DRAUGHT GENERATED BY YOUR FLUE MUST BE SUFFICIENT BUT NOT EXCESSIVE.
Measurements must always be taken when the appliance is hot (at nominal heat output).
If the negative pressure exceeds 17 Pa (= 1.7 mm water column), it must be reduced by installing an additional draught regulator (throttle valve) on the exhaust pipe or inside the chimney, in accordance with current regulations.

FOR BEST PERFORMANCE OF THE APPLIANCE, THERE MUST BE A SUFFICIENT SUPPLY OF COMBUSTION AIR TO THE INSTALLATION AREA (see the chapter on VENTILATION AND AIRING OF INSTALLATION ROOMS).

SHARED CHIMNEY FLUE

Check on the CE Technical Data Sheet whether the product is suitable for installation in a shared chimney flue (i.e. with multiple connection).

Suitable devices can be installed in shared flue systems provided that:
- installation in a shared chimney flue (i.e. with multiple connection) is allowed in the place of installation;
- the requirements of national and regional Standards are strictly complied with [for GERMANY, for example, DIN EN 13384-2, DIN V 18160-1, DIN 18896 and MFeuV-2007 (Muster-Feuerungsverordnung)];
- the installer or district chimney sweep has inspected and approved the installation conditions.

Please also remember the following indications, which the end user must comply with:
- The device can be operated only with the doors closed.
- The doors and all setting devices must remain closed when the device is not on (except for cleaning and maintenance operations).

FLUE FOR AN OPEN FIREPLACE OR FIREBOX

When using the flue of an open fireplace or firebox, the hood must be airtight below the connection point of the flue pipe (Pos. **A** (**Figure 4**).
If the flue is too large (e.g. 30x40 cm or 40x50 cm), it must be lined with a stainless steel pipe with a minimum diameter of 200 mm (Pos. **B**), ensuring that the remaining space between the pipe and the flue is completely sealed immediately below the chimney pot (Pos. **C**.

Figure 4	Images are for illustrative purposes	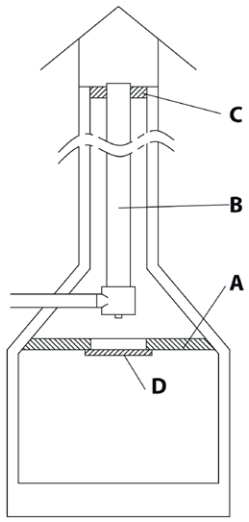
A	Airtight closure	
B	Stainless steel	
C	Sealing	
D	Inspection hatch	

CHIMNEY POT

THE FLUE DRAUGHT ALSO DEPENDS ON THE SUITABILITY OF THE CHIMNEY POT.
IT IS THEREFORE ESSENTIAL THAT, IF THE POT IS CUSTOM-BUILT, THE OUTLET CROSS-SECTION BE AT LEAST TWICE THE INTERNAL CROSS-SECTION OF THE FLUE (**Figure 5**).

Since the chimney pot must always extend beyond the roof ridge, it must also ensure proper exhaust even in windy conditions (**Figure 6**).

The chimney pot must meet the following requirements:

- Have an internal cross-section equivalent to that of the chimney.
- Have an effective outlet cross-section twice the internal cross-section of the flue.
- Be designed to prevent the infiltration of rain, snow or any foreign objects into the flue.
- Be easy to inspect, allowing for maintenance and cleaning operations.

Figure 5	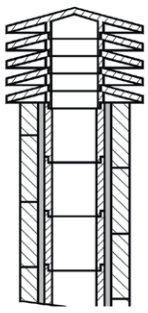	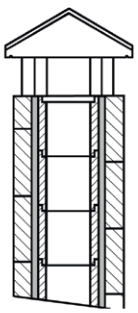	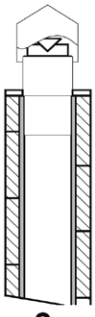	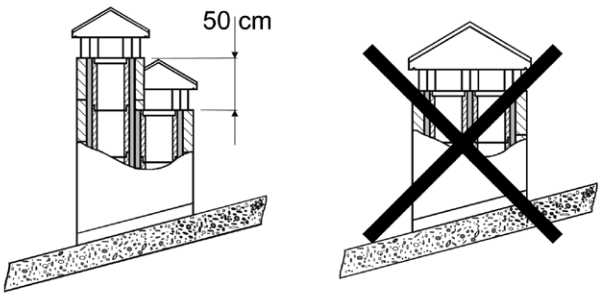
1	Prefabricated industrial chimney pot, ensuring excellent smoke dispersion.			
2	Custom-built chimney pot. The minimum outlet cross-section must be at least twice, and ideally 2.5 times the internal cross-section of the flue.			
3	Chimney pot for steel flue, featuring an internal smoke baffle cone.			
4	For adjacent flues, one chimney pot must be positioned at least 50 cm higher than the other to prevent pressure transfer between the flues.			

Figure 6	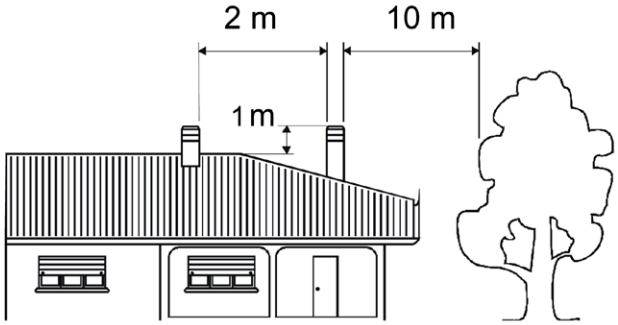
	The chimney pot must not have any obstructions within 10 m, such as walls, roof slopes or trees. Otherwise, it must be raised by at least 1 m above the highest obstacle. The chimney pot must extend at least 1 m above the roof ridge.

CHIMNEY POT DISTANCES AND POSITIONING (UNI 10683)	
Roof inclination	**>10°**

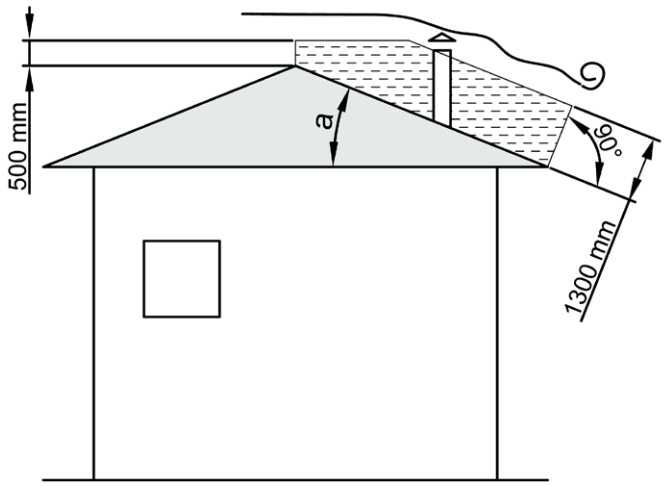

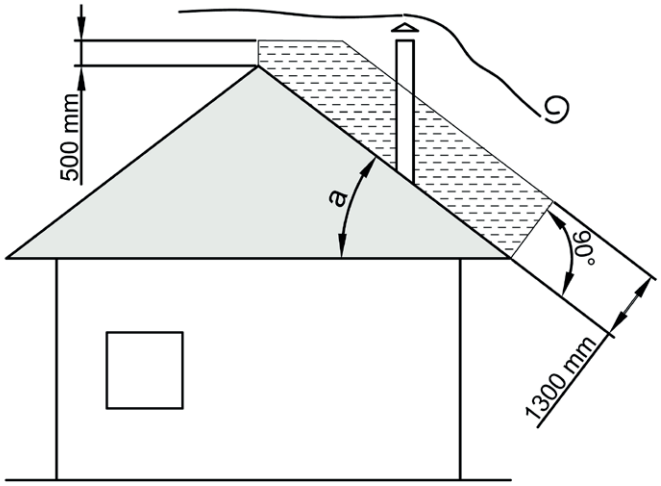

DETAILS DANTE.16

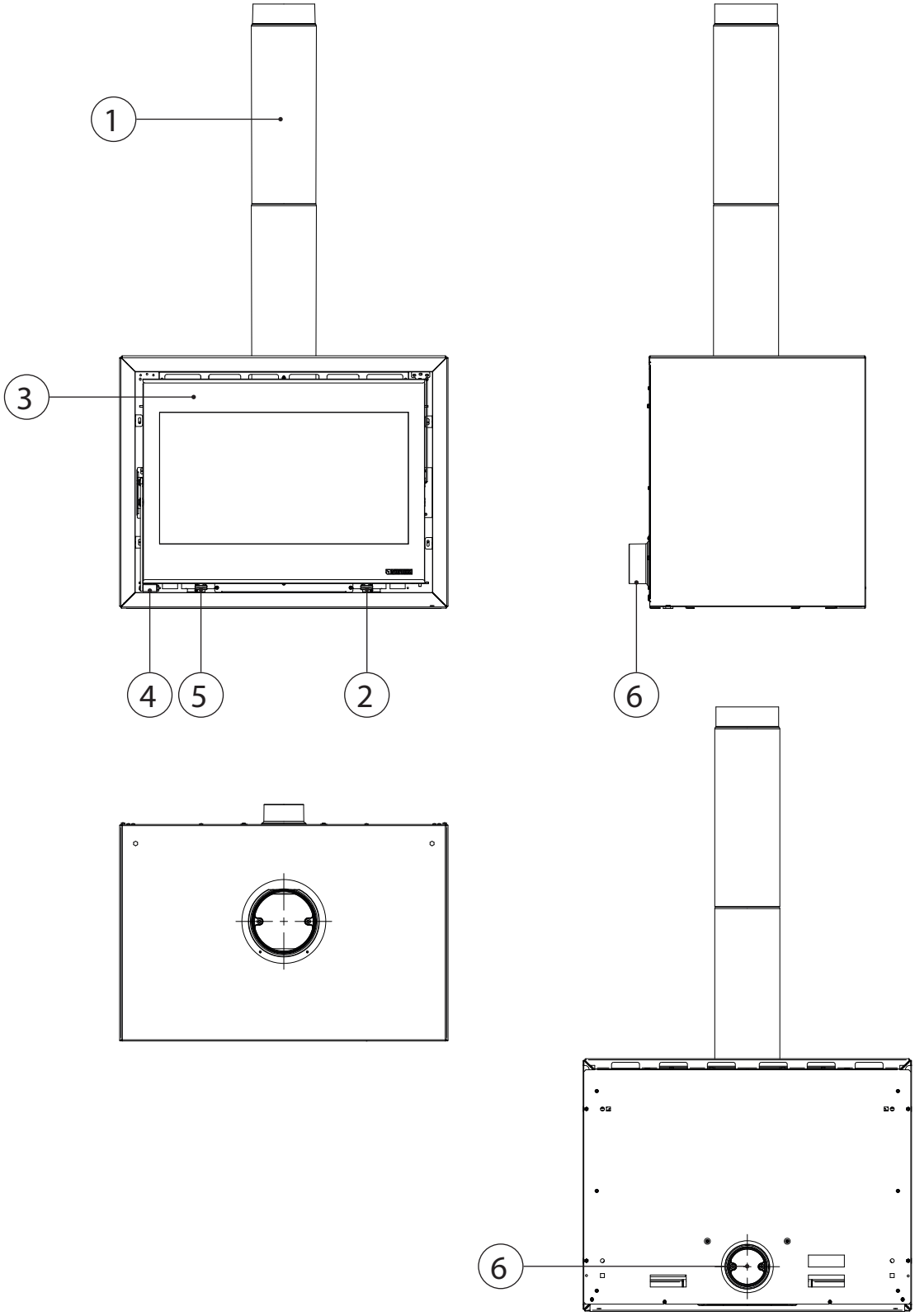

1	Smoke outlet	4	Firebox door handle
2	Secondary air damper	5	Primary air damper
3	Firebox door	6	External air intake – Combustion air inlet

DETAILS DANTE.16 CON PORTALEGNA

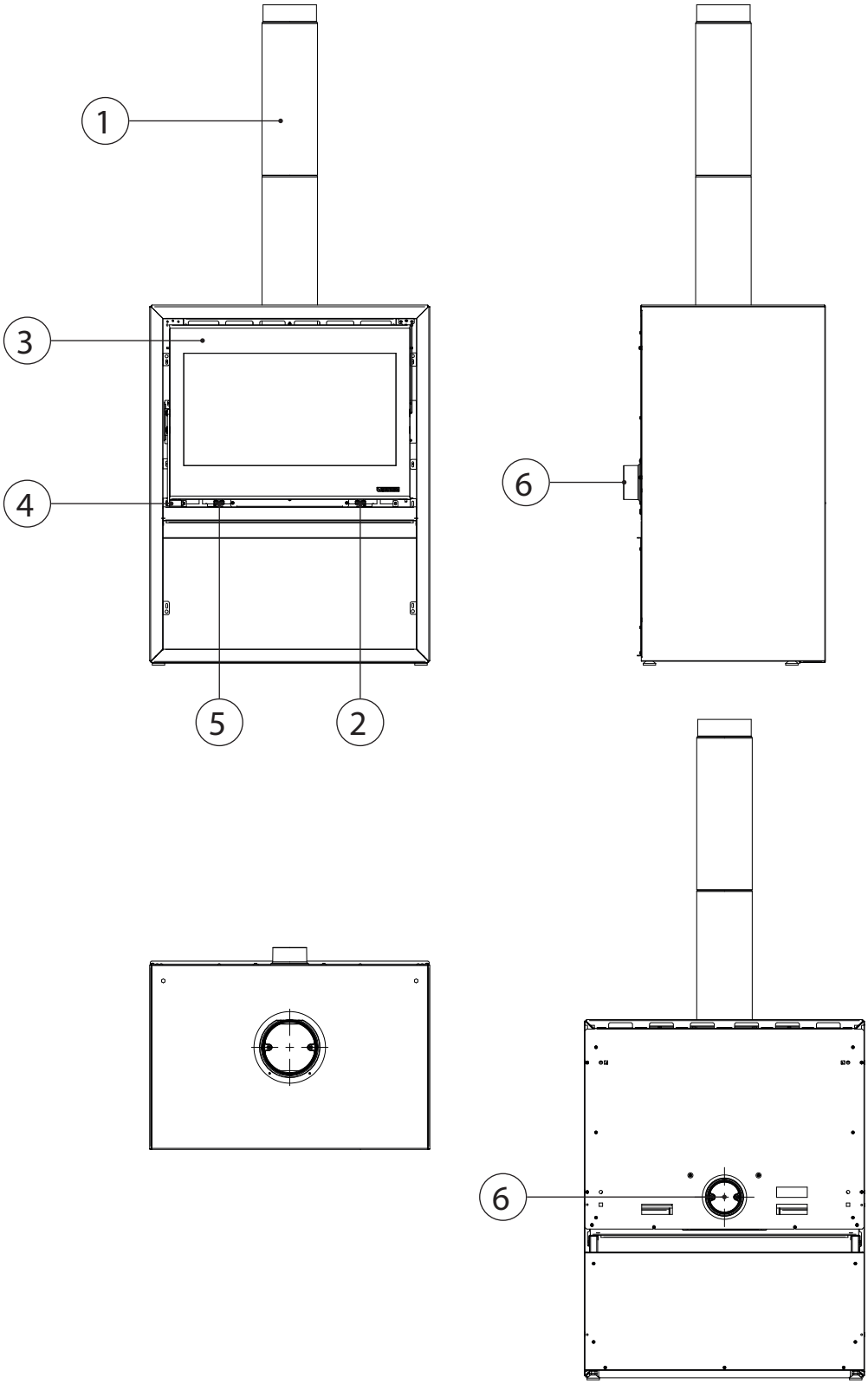

1	Smoke outlet	4	Firebox door handle
2	Secondary air damper	5	Primary air damper
3	Firebox door	6	External air intake – Combustion air inlet

TECHNICAL DESCRIPTION

La NORDICA wood-fired stoves are suitable for heating living spaces for certain periods.

LOGS ARE USED AS FUEL.

THIS IS AN INTERMITTENT COMBUSTION APPLIANCE.

CONSTRUCTION SYSTEM:

Type 1: products with automatic door closure.
Type 2: products without automatic door closure.

The stove is made of galvanised steel sheets, enamelled cast iron and, depending on the versions, radiant ceramic or natural stone plates. The firebox is internally lined with individual cast-iron panels, the rear part is removable. Thanks to calibrated holes drilled into the latter, a supply of pre-heated air is guaranteed inside the firebox, resulting in post-combustion that increases efficiency and reduces gas emissions. A removable rotating grate is located in the interior.

The one-piece ceramic glass door (heat-resistant up to 700°C) offers a captivating view of the flames while preventing any sparks or smoke from escaping.

ACCESSORIES	POKER	GLOVE	RING Ø **100mm** AIR FITTING	BENCH
	SUPPLIED STANDARD	SUPPLIED STANDARD	SUPPLIED STANDARD	**OPTIONAL**

THE ROOM IS HEATED BY IRRADIATION: heat is radiated into the room through the panoramic glass and hot external surfaces.

THE APPLIANCE IS EQUIPPED WITH PRIMARY AND SECONDARY AIR DAMPERS, USED TO REGULATE THE COMBUSTION AIR.

1A - PRIMARY Air Damper (Figure 7)

The damper located under firebox door (on the Left) is used to adjust the flow of air through the ash drawer and grate towards the fuel. Primary air is essential for the combustion process. To open the primary air intake, the lever must be fully extracted (pull).

The ash drawer must be emptied regularly to prevent ash from blocking the intake of primary air required for combustion. The primary air also keeps the fire burning.
When burning firewood, the primary air damper should be opened only slightly to prevent the firewood from burning too quickly and the appliance from overheating (see section on OPERATION).

2A - SECONDARY Air Damper (Figure 7)

A secondary air damper is located under the firebox door (on the right).

This damper must be fully open (i.e. ,the lever fully inserted), especially when burning firewood, so that the unburned carbon can undergo post-combustion, increasing efficiency and ensuring the cleanliness of the glass (see section on OPERATION).

USING A FLEXIBLE HOSE (FIREPROOF, NOT SUPPLIED), COMBUSTION AIR CAN BE DRAWN DIRECTLY FROM OUTSIDE (SEE PARAGRAPH ON VENTILATION AND AIRING OF INSTALLATION ROOMS) Figure 7.

Figure 7

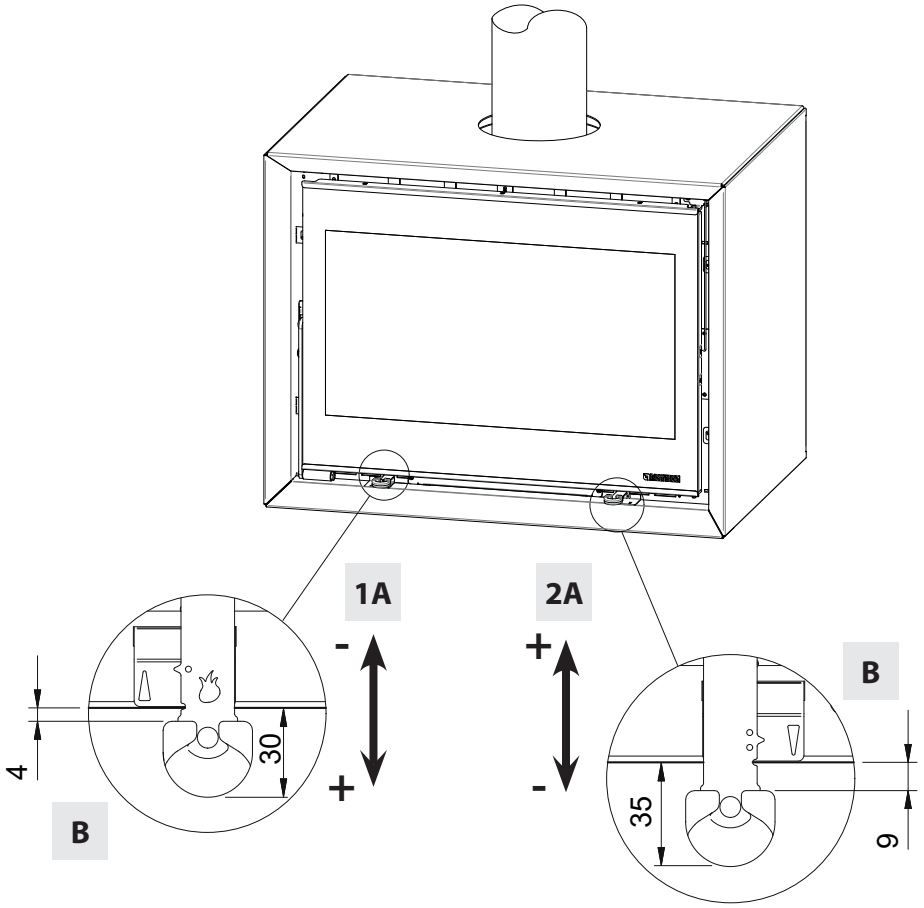

DAMPER adjustment required to achieve the nominal heat output.

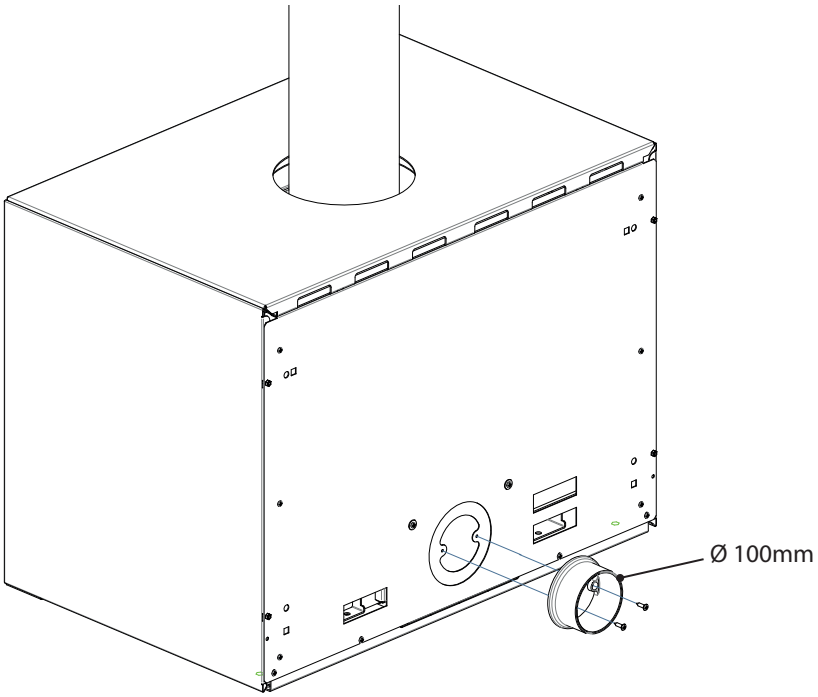

IGNITION

AT THE FIRST IGNITION, AN UNPLEASANT ODOUR WILL INEVITABLY BE PRODUCED (DUE TO THE DRYING OF THE ADHESIVES IN THE SEALING GASKET OR THE PROTECTIVE VARNISH), WHICH DISAPPEARS AFTER A SHORT PERIOD OF USE.

HOWEVER, GOOD VENTILATION OF THE ROOM MUST BE ENSURED. AT THE FIRST IGNITION, IT IS ADVISABLE TO LIMIT THE AMOUNT OF LOADED FUEL, GRADUALLY INCREASING THE HEAT OUTPUT OF THE APPLIANCE.

IT IS PROHIBITED TO USE LIQUIDS SUCH AS ALCOHOL, PETROL, PETROLEUM AND THE LIKE.
NEVER SWITCH ON THE APPLIANCE WHEN THERE ARE COMBUSTIBLE GASES IN THE ROOM.

When first igniting products treated with high-temperature paint, it is important to consider the following:

- the construction materials of the products in question are not homogeneous, in fact cast iron and steel parts coexist.
- the temperature distribution across the product's body is not uniform: different areas may reach temperatures ranging from 300°C to 500°C;
- over its lifetime, the product undergoes alternating cycles of ignition and shutdown within the same day, as well as periods of intense use or complete inactivity depending on the season;
- before being considered fully "broken in", a new product must go through several ignition cycles to allow all materials and the paint to adapt to thermal stress;
- during the initial ignitions, odours typical of metals exposed to high thermal stress and fresh paint curing, may be emitted.

Therefore, it is extremely important that the following precautions be taken during ignition:

1. Ensure a strong exchange of air in the room where the appliance is installed.
2. On first ignitions, do not overload the combustion chamber (about half the amount indicated in the instruction manual) and keep the product running for at least 6–10 hours continuously, with the dampers less open than indicated in the instruction manual.
3. Repeat this ignition process at least 4–5 times or more, depending on your availability.
4. Gradually increase the load (while adhering to the maximum load recommendations in the instruction manual) and aim for longer ignition periods. Avoid short ignition-shutdown cycles during this initial phase.
5. **ON FIRST IGNITIONS, NO OBJECTS SHOULD BE PLACED ON THE APPLIANCE, IN PARTICULAR ON THE LACQUERED SURFACES. LACQUERED SURFACES MUST NOT BE TOUCHED DURING HEATING.**
6. Once the breaking-in period is complete, the product can be used like a car engine, avoiding sudden overheating with excessive loads.

PREPARING FOR IGNITION

To light the fire, we recommend using small wood kindling with paper or other commercially available fire-starting products.

NEVER LEAVE THE FIREBOX UNATTENDED DURING THIS PROCEDURE.

TO LIGHT THE FIRE:

- Open the throttle valve, if present, on the flue pipe, too.
- Open the primary and secondary damper.
- **STRICTLY DURING THIS STAGE OF IGNITION, after igniting the fire, move the door towards the insert** (FIRST HANDLE CLICK) see **Figure**.
- Once the fire is burning steadily, **FULLY CLOSE THE DOOR**.
- Close the throttle valve, if present, on the flue pipe.
- Shut the primary air damper

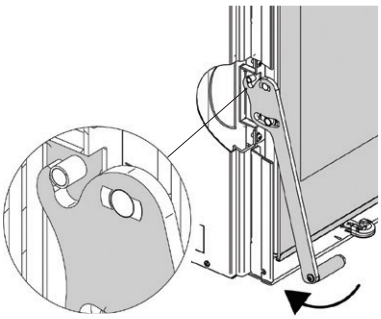

THE DAMPERS MUST BE ADJUSTED DURING IGNITION AS FOLLOWS:

PRIMARY Air	SECONDARY Air	TERTIARY Air
OPEN	OPEN	PRE-ADJUSTED

FIRST LOAD IGNITION (see **figure A**):

- For ignition, arrange the largest pieces of firewood (**1**) with a maximum length of 25 cm at the bottom;
- Arrange the finer pieces of firewood (**2**), with a maximum length of 25 cm, on top of the other pieces (1);
- Place the fire starter (**3**) at the top of the woodpile, which may be, for example wood wool impregnated with wax;
- Light the fire starter (**3**). One match is enough to light the fire.

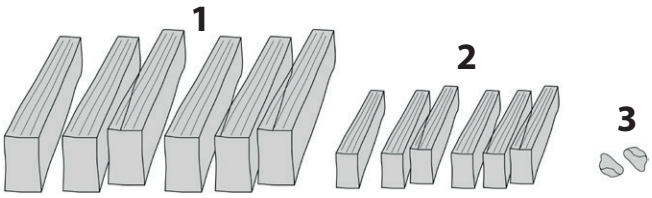

MAXIMUM PERMISSIBLE LOAD

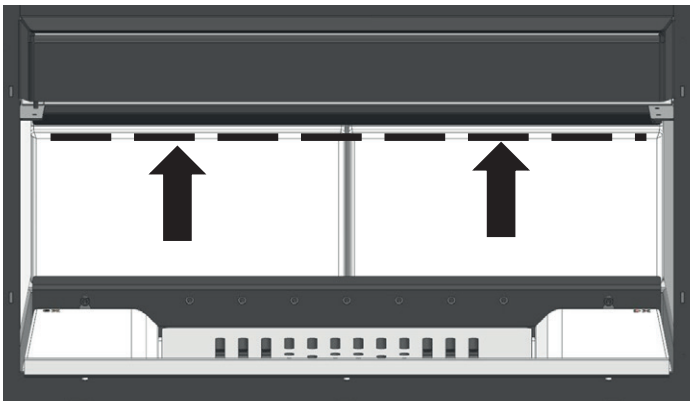

Figure A

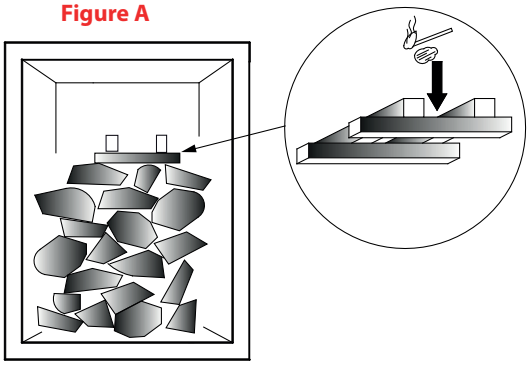

NEVER OVERLOAD THE APPLIANCE. TOO MUCH FUEL AND COMBUSTION AIR CAN CAUSE OVERHEATING AND THUS DAMAGE THE APPLIANCE. THE WARRANTY DOES NOT COVER DAMAGE DUE TO OVERHEATING OF THE APPLIANCE.

After lighting the fire, leave the combustion air damper in the position indicated:

PRIMARY Air	SECONDARY Air	TERTIARY Air
CLOSED	1/2 OPEN	PRE-ADJUSTED

SECOND LOAD IGNITION:

Use large pieces of firewood (1) 25 cm long.
Reload only when the flame is nearly extinguished.

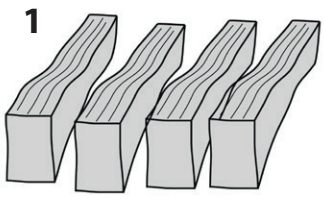

TO AVOID ESCAPING SMOKE, THERE SHOULD BE ONLY EMBERS WHEN THE FIREWOOD IS LOADED.

THIRD LOAD IGNITION:

The nominal load consists of large pieces of firewood (1) 25 cm long.
Reload only when the flame is nearly extinguished.

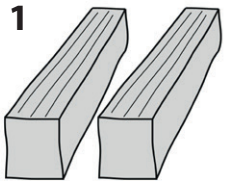

DO NOT EXCEED THE MAXIMUM FIREWOOD LOAD - SEE TECHNICAL DATA AND HOURLY CONSUMPTION IN THE DOCUMENT "CE MARKING INFORMATION".

Upon completion of the ignition cycle, load more firewood to bring the product up to the optimal operating speed.
To achieve nominal operation, a bed of embers approximately 3cm high (20-25% of the load weight at nominal power) is required.
If the ember bed is excessive, first stir it with the poker to allow the ash to fall into the ash drawer, then use a metal shovel to remove the excess embers.
The embers must not exceed the reference shown in the figure opposite.

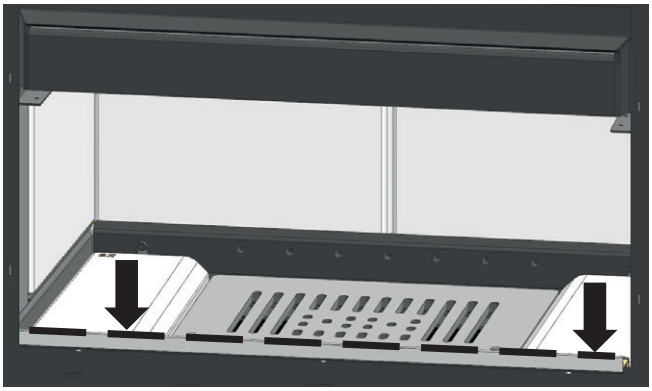

NORMAL OPERATION

Before placing the firewood, fully open the primary air damper and, using the supplied poker, stir the embers to reignite them. Once the firewood is in the combustion chamber (see LOADING INSTRUCTIONS) close the door and wait up to 3 minutes for the flame to ignite, then set the damper in the appropriate position to obtain the nominal output.
Loading takes approximately 45 minutes.

LOADING INSTRUCTIONS

No. logs	2
Nominal load weight	2.4 kg
Log length	33 cm
Positioning in chamber	10 cm from the stainless steel profile (see figure)
Log shape	(see figure)

TO OBTAIN THE NOMINAL HEAT OUTPUT, THE DAMPERS MUST BE SET AS FOLLOWS:

Figure 7	1A - PRIMARY air	2A - SECONDARY air	TERTIARY Air
DANTE.16 DANTE.16 CON PORTALEGNA	Figure 7 - B	Figure 7 - B	PRE-ADJUSTED

Loading is complete when, after loading, the combined weight of the ember and ash bed does not differ by more than 100g from the weight of the previous load.

THE USE OF THERMAL INSULATION ACCORDING TO ENERGY-SAVING REGULATIONS INCREASES THE HEATED VOLUME. IN THE CASE OF TEMPORARY HEATING WITH INTERRUPTIONS OF MORE THAN 8 H, THE HEATING CAPACITY DECREASES BY APPROXIMATELY 25%.

THE TECHNICAL DATA DECLARED IN THE DOCUMENT "CE MARKING INFORMATION" WAS OBTAINED USING CLASS "A1" BEECH WOOD ACCORDING TO UNI EN ISO 17225-5 WITH A MOISTURE CONTENT OF LESS THAN 20%. THE USE OF OTHER WOOD TYPES MAY REQUIRE SPECIFIC ADJUSTMENTS AND COULD RESULT IN DIFFERENT PRODUCT PERFORMANCE.

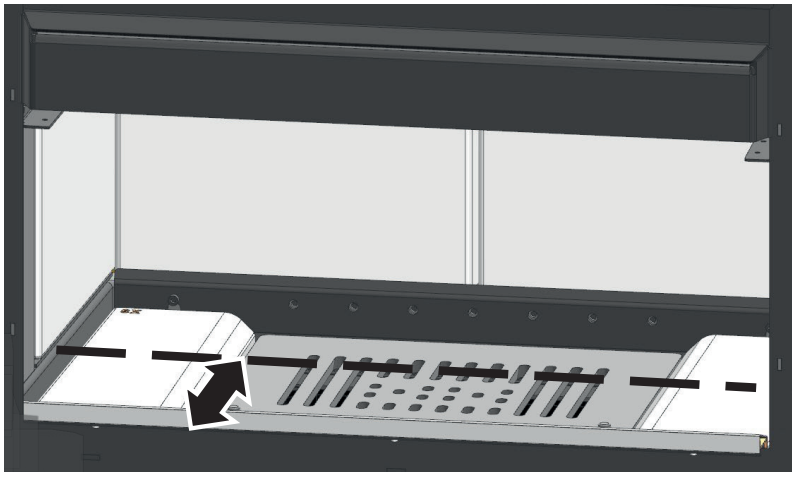

Log shape

ALWAYS USE THE PRODUCT WITH THE DOOR CLOSED TO AVOID DAMAGE DUE TO OVERHEATING (FORGING EFFECT). FAILURE TO DO SO WILL INVALIDATE THE WARRANTY.

FOR SAFETY REASONS, THE FIREBOX DOOR MAY ONLY BE OPENED DURING FUEL LOADING. THE FIREBOX MUST REMAIN CLOSED DURING OPERATION AND PERIODS OF NON-USE.

The dampers are used to regulate the heat output of the firebox. They should be opened according to the required heat output. The best combustion (with minimal emissions) is achieved when, after loading wood, most of the combustion air passes through the secondary air damper.

NEVER OVERLOAD THE APPLIANCE. TOO MUCH FUEL AND COMBUSTION AIR CAN CAUSE OVERHEATING AND THUS DAMAGE THE APPLIANCE. DAMAGE CAUSED BY OVERHEATING IS NOT COVERED BY WARRANTY. ALWAYS USE THE PRODUCT WITH THE DOOR CLOSED TO AVOID DAMAGE DUE TO OVERHEATING (FORGING EFFECT).

IN ADDITION TO THE COMBUSTION AIR SETTING, THE COMBUSTION INTENSITY AND THUS THE HEAT OUTPUT IS ALSO INFLUENCED BY THE CHIMNEY. A HIGH CHIMNEY DRAUGHT REQUIRES LESS COMBUSTION AIR, WHILE A LOW DRAUGHT REQUIRES MORE COMBUSTION AIR.

To check for efficient combustion, observe the smoke coming from the chimney – it should be clear. If it is white, it means that the appliance is not properly adjusted or the firewood is too wet; if, on the other hand, the smoke is grey or black, it is a sign that combustion is not complete (more secondary air is needed).

WHEN ADDING FUEL ONTO EMBERS IN THE ABSENCE OF FLAMES, A HIGH LEVEL OF SMOKE MAY BE PRODUCED. IF THIS OCCURS, A MIXTURE OF GAS AND AIR MAY FORM, WHICH, IN EXTREME CASES, COULD LEAD TO AN EXPLOSION. FOR SAFETY REASONS, A NEW IGNITION PROCEDURE SHOULD BE PERFORMED USING SMALL STRIPS.

USING THE FOOD WARMER (WHERE PRESENT)

The temperature of the food warmer can be significantly affected by the intake of combustion air.
A sufficient chimney draught and proper cleaning of the ducts to promote the flow of otherwise harmful fumes around the food warmer, are essential.
When HEATING very damp foods, cakes with fruit or fruit itself, condensate is produced.
During cooking, aqueous vapour may form, which is then deposited on the top or side of the door, forming condensate droplets. This is a natural phenomenon.
Briefly and carefully open the door to release some of the steam in the cooking chamber and significantly reduce the formation of condensate.

OPERATION AT HIGH OUTSIDE TEMPERATURES

If the outside temperature is significantly higher than that of the installation room, the draught may be insufficient to fully expel the fumes, potentially resulting in a strong gas odour.
In this case, try reducing the fuel load to promote faster combustion (flame development) and restore proper draught.

ALSO CHECK THE AIRTIGHTNESS OF ALL OPENINGS FOR FLUE CLEANING AND CONNECTIONS. IN IN DOUBT, DO NOT OPERATE THE PRODUCT.

Under all conditions, including the presence of extractor hoods and/or controlled forced ventilation systems, the pressure difference between the rooms where the heater is installed and the outside must always be ≥ -4 Pa (e.g. -3 Pa is an acceptable value).

TO FIND OUT WHERE YOUR NEAREST SERVICE CENTRE IS, CONTACT YOUR DEALER OR VISIT THE WEBSITE:
WWW.LANORDICA-EXTRAFLAME.COM

MAINTENANCE AND CARE

FOLLOW ALL THE INSTRUCTIONS WITH MAXIMUM SAFETY!

- ENSURE THE POWER CORD (WHERE PRESENT) IS UNPLUGGED.
- THAT THE HEATER AND ALL ITS PARTS HAVE COOLED.
- THAT THE ASHES HAVE FULLY COOLED.
- ENSURE EFFICIENT AIR EXCHANGE IN THE ROOM WHEN CLEANING THE PRODUCT.
- POOR CLEANING NEGATIVELY AFFECTS THE PERFORMANCE AND SAFETY OF THE PRODUCT!

REGULAR CLEANING UNDER THE USER'S RESPONSIBILITY

The periodic cleaning operations, as indicated in this use and maintenance manual, must be performed with the utmost care after reading the instructions, procedures and regularity described herein.

CHECK AND CLEAN THE FRESH AIR INTAKE AT LEAST ONCE A YEAR. THE CHIMNEY MUST BE REGULARLY SWEPT BY THE CHIMNEY SWEEP. HAVE YOUR LOCAL CHIMNEY SWEEP CHECK THE PROPER INSTALLATION OF THE PRODUCT, CONNECTION TO THE CHIMNEY AND VENTILATION

CLEANING AND MAINTENANCE MUST ONLY BE PERFORMED WHEN THE APPLIANCE IS COLD. USE ONLY SPARE PARTS EXPRESSLY AUTHORISED AND SUPPLIED BY LA NORDICA S.P.A. PLEASE CONTACT YOUR SPECIALISED RETAILER IF YOU REQUIRE SPARE PARTS. NO CHANGES MUST BE MADE TO THE APPLIANCE!!!

CLEANING THE GLASS

A specific secondary air inlet effectively slows down the formation of dirt deposits on the door glass. However, such deposits can never be avoided with the use of solid fuels (e.g. damp firewood) and are not to be regarded as a defect of the appliance .

THE PANORAMIC GLASS MUST ONLY BE CLEANED WHEN THE APPLIANCE IS COLD TO PREVENT IT FROM EXPLODING. CLEANING CAN BE DONE USING SPECIFIC PRODUCTS OR BY DAMPENING A BALL OF NEWSPAPER AND PASSING IT THROUGH THE ASH. HOWEVER, DO NOT USE ABRASIVE OR CHEMICALLY AGGRESSIVE CLOTHS OR PRODUCTS.

Proper ignition, the right type and amount of fuel, the correct setting of the secondary air damper, a suitable chimney draught and steady supply of combustion air are all essential for the optimal performance of the appliance and in keeping the glass clean.

GLASS BREAKAGE: THE GLASS PANES, MADE OF HIGH-QUALITY GLASS-CERAMIC, ARE RESISTANT TO THERMAL SHOCKS AND CAN WITHSTAND TEMPERATURE VARIATIONS OF UP TO 750°C. IT CAN ONLY BE BROKEN BY MECHANICAL SHOCKS (BUMPS OR VIOLENT CLOSURE OF THE DOOR, ETC.). THEREFORE, THEIR REPLACEMENT IS NOT INCLUDED IN THE WARRANTY.

CLEANING THE ASH DRAWER

All products have a firebox grate and ash drawer (**Figure 8**). We recommend that you periodically empty the ash drawer and avoid filling it completely, so as not to overheat the grate. Moreover, it is suggested to always leave 3-4 cm of ash in the firebox.

CAUTION: THE ASHES REMOVED FROM THE FIREBOX MUST BE STORED IN A CONTAINER MADE OF FIREPROOF MATERIAL FITTED WITH AN AIRTIGHT COVER. THE CONTAINER MUST BE PLACED ON A FIREPROOF FLOOR, AWAY FROM FLAMMABLE MATERIALS UNTIL THE ASH IS EXTINGUISHED AND FULLY COOLED.

CLEANING THE FLUE

Proper ignition, the right type and amount of fuel, the correct setting of the secondary air damper, a suitable chimney draught and steady supply of combustion air are all essential for the optimal performance of the appliance and in keeping the glass clean. **THE APPLIANCE SHOULD BE THOROUGHLY CLEANED AT LEAST ONCE A YEAR OR WHENEVER REQUIRED (IN CASE OF POOR PERFORMANCE AND LOW OUTPUT). EXCESSIVE SOOT (CREOSOTE) DEPOSITS CAN LEAD TO PROBLEMS IN THE FLUE EXHAUST AND TO FLUE FIRES.**

CLEANING MUST ONLY BE CARRIED OUT WHEN THE APPLIANCE IS COLD. THIS PROCEDURE SHOULD BE CARRIED OUT BY A CHIMNEY SWEEP, WHO CAN PERFORM AN INSPECTION AT THE SAME TIME.

During cleaning, the ash drawer (1) and baffle (2) must be removed from the appliance to facilitate cleaning of the soot.
The baffles can be easily removed from their housings and must be replaced in their original position after cleaning.

Figure 8

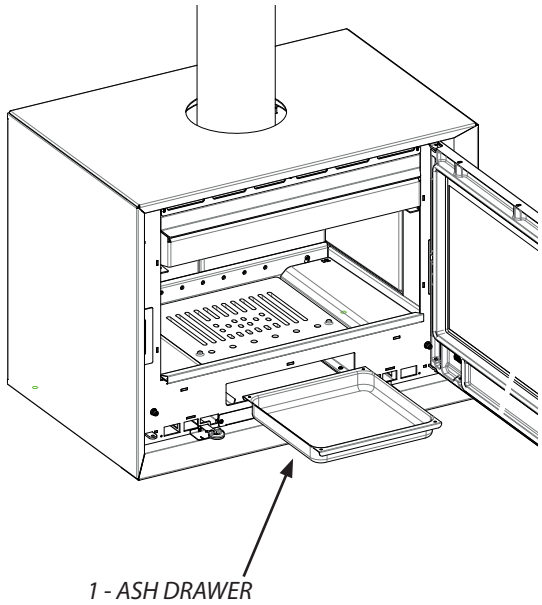

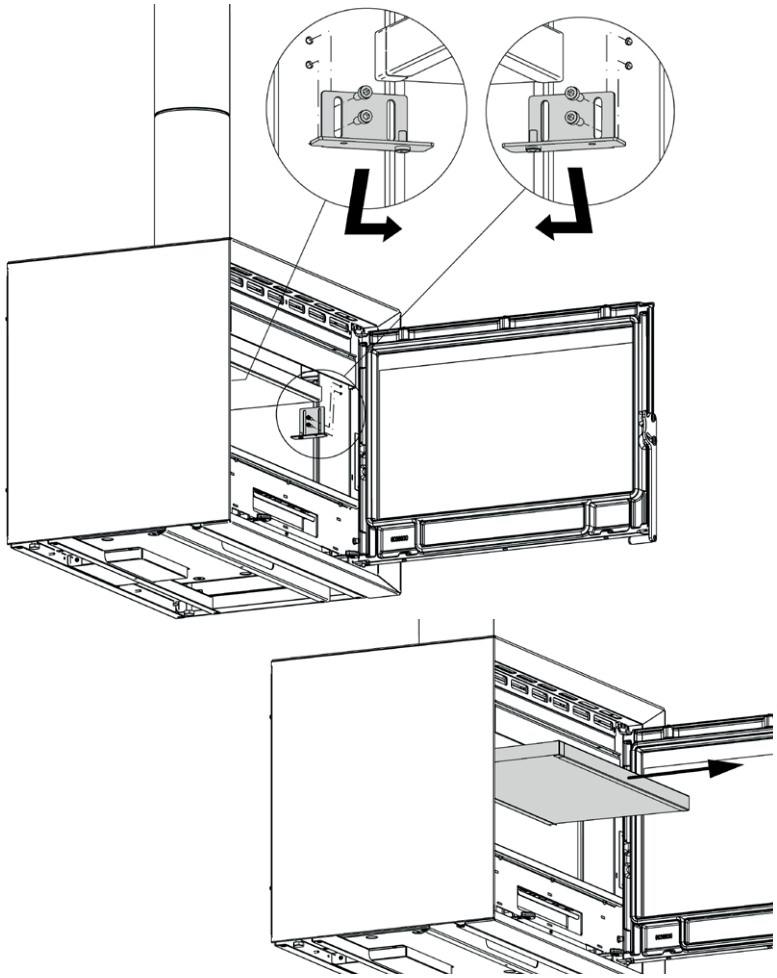

THE ABSENCE OF THE SMOKE BAFFLE CAUSES A STRONG VACUUM WITH EXCESSIVELY RAPID COMBUSTION, EXCESSIVE FIREWOOD CONSUMPTION AND RELATIVE OVERHEATING OF THE APPLIANCE.

MAJOLICA (IF PRESENT)

LA NORDICA S.p.A. majolica tiles are the result of high-quality craftsmanship and as such may present micro-crackling, crazing or colour imperfections. These characteristics attest to its high-quality nature. Enamel and majolica, due to their varying expansion coefficients, produce micro-crackling (crazing) that demonstrate their authenticity.

WHEN CLEANING THE TILES, IT IS RECOMMENDED TO USE A SOFT, DRY CLOTH; IF ANY DETERGENT OR LIQUID IS USED, THIS MAY PENETRATE INTO THE CAVITIES AND PERMANENTLY EXPOSE THEM.

NATURAL STONE PRODUCTS (IF PRESENT)

NATURAL STONE IS CLEANED WITH VERY FINE SANDPAPER OR ABRASIVE SPONGE. **DO NOT** USE DETERGENTS OR LIQUIDS.

PAINTED PRODUCTS (IF PRESENT)

After years of using the product, colour changes of painted parts is a completely natural phenomenon. This phenomenon is due to the considerable temperature variations to which the product is subject when it is in operation and to the ageing of the paint itself over time.

BEFORE THE APPLICATION OF NEW PAINT, ANY RESIDUE MUST BE CLEANED AND REMOVED FROM THE SURFACE TO BE PAINTED.

ENAMELLED PRODUCTS (IF PRESENT)

To clean the enamelled parts, use soapy water or a neutral, **NON-ABRASIVE, NON-CHEMICALLY AGGRESSIVE DETERGENT**, at a cold temperature.

AFTER CLEANING, DO NOT LEAVE THE SOAPY WATER OR DETERGENT TO DRY – REMOVE THEM IMMEDIATELY. DO NOT USE SANDPAPER OR STEEL WOOL.

CHROME-PLATED COMPONENTS (IF PRESENT)

If the chrome-plated components turn bluish due to overheating, this can be resolved using a suitable cleaning product.

CAST IRON RINGS (IF PRESENT)

The cast iron rings should be periodically sanded with 150-grit sandpaper, **BUT NOT THE ENAMELLED PARTS.**

TO PREVENT THE FORMATION OF RUST, DO NOT LEAVE POTS AND PANS ON THE COLD STOVE. THIS COULD CAUSE UNSIGHTLY AND HARD-TO-REMOVE RUST STAINS!

CLEANING THE FIREBOX GRATE

IMPORTANT: If for any reason the grate is removed from the firebox, it is IMPORTANT, when replacing it, that the flat part with the narrower ash passages be facing upwards; failure to do so would make it difficult to remove the ash from the grate (see figure opposite).

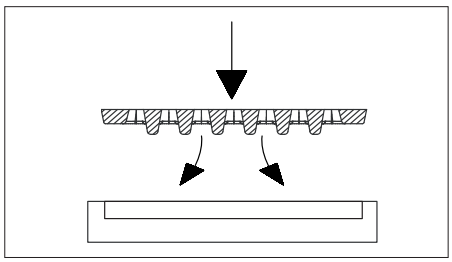

FOOD WARMER MAINTENANCE (WHERE PRESENT)

To prevent the formation of rust, it is recommended to:

- Release the steam from the food warmer to reduce the formation of any condensate, briefly and carefully opening the door;
- Remove the food from the food warmer once cooked. Leaving the food to cool inside the food warmer under 150°C causes condensation;
- Leave the food warmer door partially open to dry up any condensate;
- If moisture forms inside the food warmer, it is advisable to apply neutral vaseline to the inside of the cast iron door (where present).
- Repeat the neutral vaseline treatment on the inside of the cast iron door every 3–6 months depending on how often the food warmer is used;
- If rust forms on the inside of the cast iron door, remove it with an abrasive material, then treat the cast iron surface with neutral vaseline.

SUMMER SHUTDOWN

After cleaning the firebox, chimney and flue, ensuring that all ash and any other residue have been removed, all doors and relative firebox dampers should be closed. If the appliance is disconnected from the chimney, the outlet hole should be closed.

IT IS ADVISABLE TO CLEAN THE FLUE AT LEAST ONCE A YEAR; AT THE SAME TIME CHECK THE ACTUAL CONDITION OF THE GASKETS, WHICH, IF NOT PERFECTLY INTACT - I.E. NO LONGER ADHERING TO THE PRODUCT - WOULD NOT GUARANTEE THE PROPER FUNCTIONING OF THE APPLIANCE! REPLACEMENT WOULD THEREFORE BE NECESSARY.

IF THE APPLIANCE IS INSTALLED IN A DAMP ROOM, PLACE ABSORBENT SALTS INSIDE THE FIREBOX. TO PRESERVE THE APPEARANCE OF THE APPLIANCE OVER TIME, PROTECT CAST-IRON PARTS WITH NEUTRAL VASELINE.

TO FIND OUT WHERE YOUR NEAREST SERVICE CENTRE IS, CONTACT YOUR DEALER OR VISIT THE WEBSITE:
WWW.LANORDICA-EXTRAFLAME.COM

ROUTINE MAINTENANCE PERFORMED BY QUALIFIED TECHNICIANS

ROUTINE MAINTENANCE MUST BE PERFORMED AT LEAST ONCE A YEAR.
SINCE THE HEATER USES FIREWOOD AS A SOLID FUEL, ANNUAL ROUTINE MAINTENANCE IS REQUIRED, WHICH MUST BE CARRIED OUT BY A QUALIFIED TECHNICIAN, USING ONLY ORIGINAL SPARE PARTS.

FAILURE TO COMPLY MAY JEOPARDISE SAFETY OF THE APPLIANCE AND INVALIDATE THE WARRANTY CONDITIONS.

Observing the cleaning frequencies reserved for the user as described in the use and maintenance manual will ensure the heater's proper combustion over time, avoiding any anomalies and/or malfunctions that could require additional call-outs.
REQUESTS FOR ROUTINE MAINTENANCE ARE NOT COVERED BY THE PRODUCT WARRANTY.

GASKETS

The gaskets ensure the airtightness and proper functioning of the product.
THEY MUST BE REGULARLY CHECKED. THEY MUST BE REPLACED IMMEDIATELY IF THEY ARE WORN OR DAMAGED.
THESE OPERATIONS MUST BE PERFORMED BY A QUALIFIED TECHNICIAN.

CONNECTION TO THE CHIMNEY

ANNUALLY, OR WHENEVER THE DUCT LEADING TO THE CHIMNEY NEEDS TO BE VACUUMED AND CLEANED. IF THERE ARE HORIZONTAL SECTIONS, REMOVE ANY RESIDUE BEFORE IT OBSTRUCTS THE PASSAGE OF SMOKE.

EN 16510-1 Symbol	EXPLANATION
nom	Nominal heat output
part	Part load heat output
CON / INT	Appliance operation, Continuos (CON) or Intermittent (INT)
$CO_{2\,nom} / CO_{2\,part}$	Carbon dioxide emission
CO_{nom} / CO_{part}	Carbon monoxide emission
d_B	Minimum distances to combustible materials - bottom
d_C	Minimum distances to combustible materials - ceiling
d_F	Minimum distances to combustible materials - floor in front
d_L	Minimum distances to combustible materials - side radiation area
d_{non}	Minimum distances to non-combustible walls
d_{out}	Flue gas exhaust pipe
d_P	Minimum distances to adjacent combustible materials - front
d_R	Minimum distances to combustible materials - rear
d_S	Minimum distances to combustible materials - side
E, f	Power supply voltage, frequency
EEI	Energy Efficiency Index
el_{max}	Consumption of electrical auxiliary energy at nominal heat output
el_{min}	Consumption of electrical auxiliary energy at part load heat output
el_{SB}	Consumption of electrical auxiliary energy at standby
H	Appliance height
L	Appliance depth
m	Net weight
m_{chim}	Maximum load of a chimney the appliance max carry
$m_{h\,nom} / m_{h\,part}$	Hourly consumption
$NO_{x\,nom} / NO_{x\,par}$	Nitrogen oxides emission
OGC_{nom} / OCG_{part}	Emission of organic gaseous carbon
PM_{nom} / PM_{part}	Particulate matter emissions
P_{nom} / P_{part}	Heat output
p_{nom} / p_{part}	Minimum flue draught
$P_{SH\,nom} / P_{SH\,part}$	Space heat output
p_W	Permissible maximum water operating pressure
$P_{W\,nom} / P_{W\,part}$	Water heat output
s	Thickness of the protective insulation material
T_{class}	Chimney designation
$T_{f,g\,nom} / T_{f,g\,part}$	Mean flue gas temperature
$T_{s\,nom} / T_{s\,part}$	Flue gas outlet temperature
W	Appliance width
W_{max}	Maximum electric power input
η_{nom} / η_{part}	Efficiency
η_S	Seasonal space heating efficiency at nominal heat output
$\Phi_{f,g\,nom} / \Phi_{f,g\,part}$	Flue gas mass flow
Wood Pellet (L)	Wood Pellet
Wood Logs (l)	Wood Logs
	Read and follow the user operating instructions

Riscalda la vita.

La NORDICA S.p.A. Via Summano, 104 36030 - MONTECCHIO PRECALCINO (VI) - ITALY
☏ +39.0445.804000 - 🖷 +39.0445.804040 - ✉ info@lanordica.com - 💻 www.lanordica-extraflame.com

MADE IN ITALY
design & production

*TO FIND THE SERVICE CENTRE NEAREST TO YOU
CONTACT YOUR DEALER OR CONSULT
THE SITE WWW.LANORDICA-EXTRAFLAME.COM*

The manufacturer reserves the right to vary the characteristics and the data reported in this pamphlet at any moment and without notice, in order to improve its products.